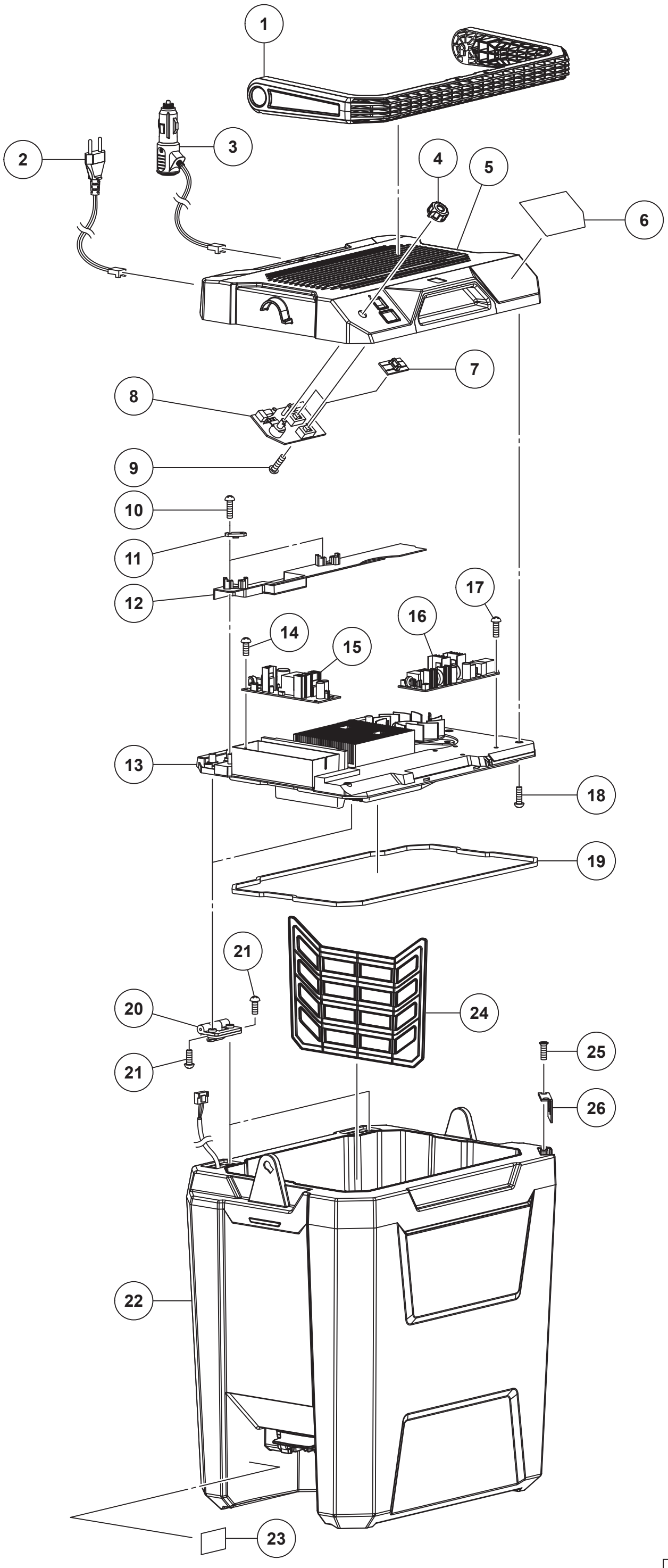

MODEL
UL18DF

Rev.1

HiKOKI

OEM UL18DF

Item No.	Code No.	Description	No. Used	Remarks
1	381505	HANDLE	1	
2	381515	AC CABLE	1	
3	381514	DC CABLE	1	
4	381507	DIAL KNOB	1	
5	381516	OUTER COVER SET	1	
6		BRAND LABEL	1	
7	381506	KNOB	2	
8	381508	SWITCH BOARD	1	
9	381520	SCREW ST3X14 (4 PCS.)	4	
10	381523	SCREW ST3X16 (4 PCS.)	4	
11	381510	PRESSURE PLATE OF WIRE	2	
12	381511	FOAM COVER PLATE	1	
13	381517	WIRING SET	1	
14	381521	SCREW ST3X12 (4 PCS.)	4	
15	381509	POWER BOARD	1	
16	381512	RELAY PCBA	1	
17	381522	SCREW ST3X10 (3 PCS.)	3	
18	381524	SCREW ST3X12 (8 PCS.)	8	
19	381546	SEALING STRIP	1	
20	381518	HINGE (2 PCS.)	2	
21	381525	SCREW ST3X10 (8 PCS.)	8	
22	381519	INNER BODY SET	1	
23		NAME PLATE	1	
24	381485	PARTITION	1	
25	381526	SCREW ST3X12 (2 PCS.)	2	
26	381513	BEER BUCKLE	1	

* ALTERNATIVE PARTS