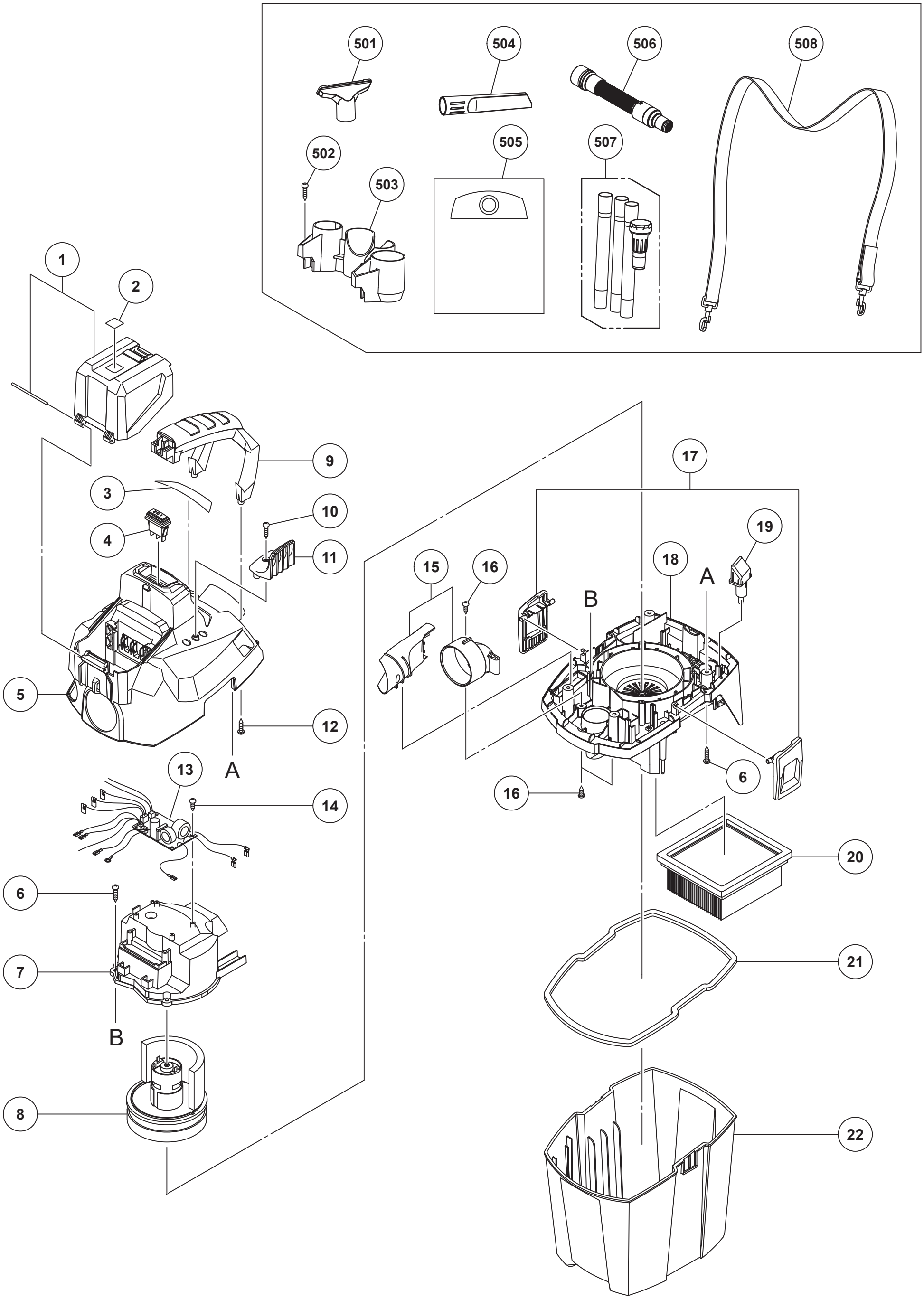

Rev.1

MODEL
RP18DA

HiKOKI

OEM RP18DA

Item No.	Code No.	Description	No. Used	Remarks
1	380960	COVER CAP SET	1	
2		LABEL (LI18)	1	
3		NAME PLATE	1	
4	380968	ROCKER SWITCH	1	
5	380959	HEAD	1	
6	380978	SCREW SET ST4.8X19 (8 PCS.)	8	
7	380970	MOTOR HOUSING	1	
8	380957	MOTOR	1	
9	380961	CARRY HANDLE	1	
10	380976	SCREW SET ST4.8X15	1	
11	380969	TUBE HOLDER	1	
12	380974	SCREW SET ST4.8X15 (5 PCS.)	5	
13	380964	ELECTRONICS UNIT	1	
14	380975	SCREW SET ST2.6X10 (4 PCS.)	4	
15	380958	RETAINER	1	
16	380977	SCREW SET ST4.8X12 (3 PCS.)	3	
17	380962	CLAMP SET	1	
18	380956	BASE PLATE	1	
19	380963	PUSH BUTTON	1	
*20	380973	HEPA FILTER (H13)	1	
*20	380971	HEPA FILTER (H14)	1	FOR USA,CAN
21	380967	SEALING FOR CARRIER PLATE	1	
*22	380965	TANK	1	
*22	380965M	TANK	1	FOR USA,CAN
		STANDARD ACCESSORIES		
501	380951	NOZZLE FOR FLUID	1	
502	380979	SCREW SET ST4.8X19 (2 PCS.)	2	
503	380950	HOLDER	1	
504	380952	CREVICE NOZZLE	1	
505	380954	DUSTBAG (5 PCS.)	1	
506	380953	HOSE	1	
507	380955	PIPE SET	1	
508	380949	SHOULDER STRAP	1	

* ALTERNATIVE PARTS