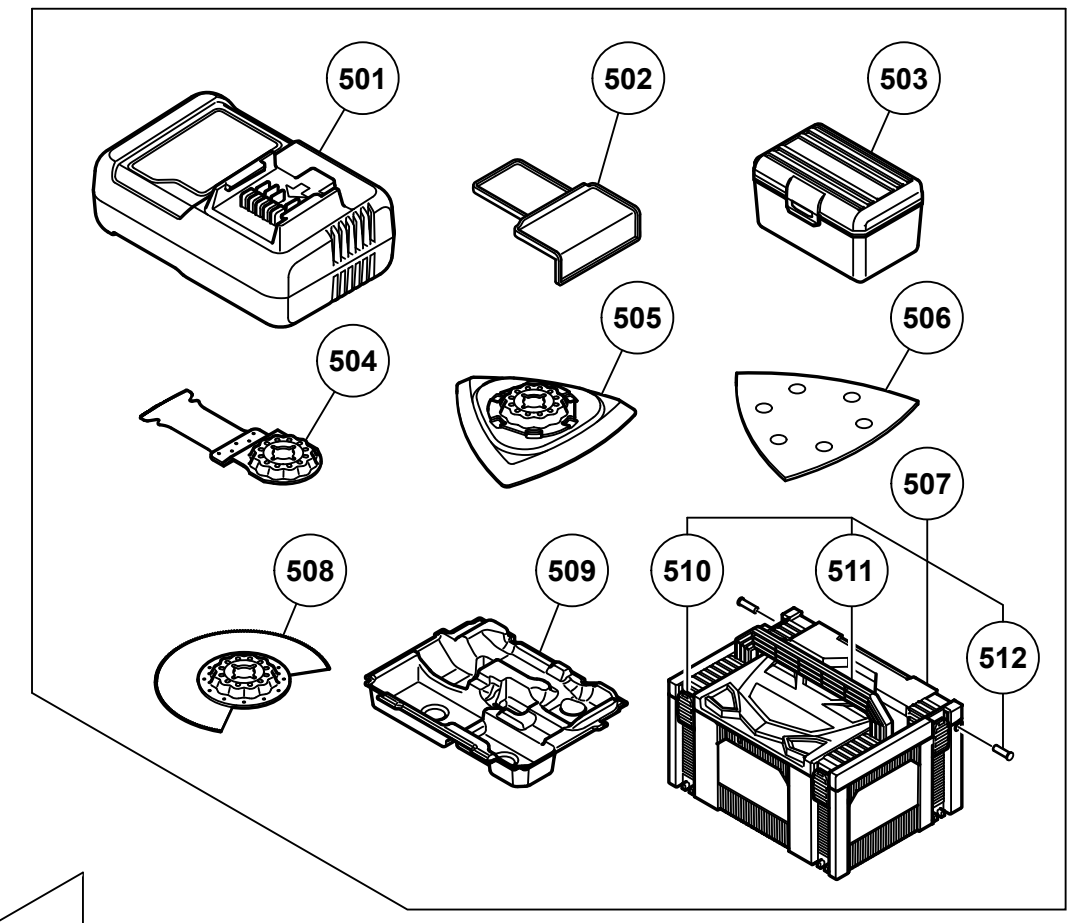

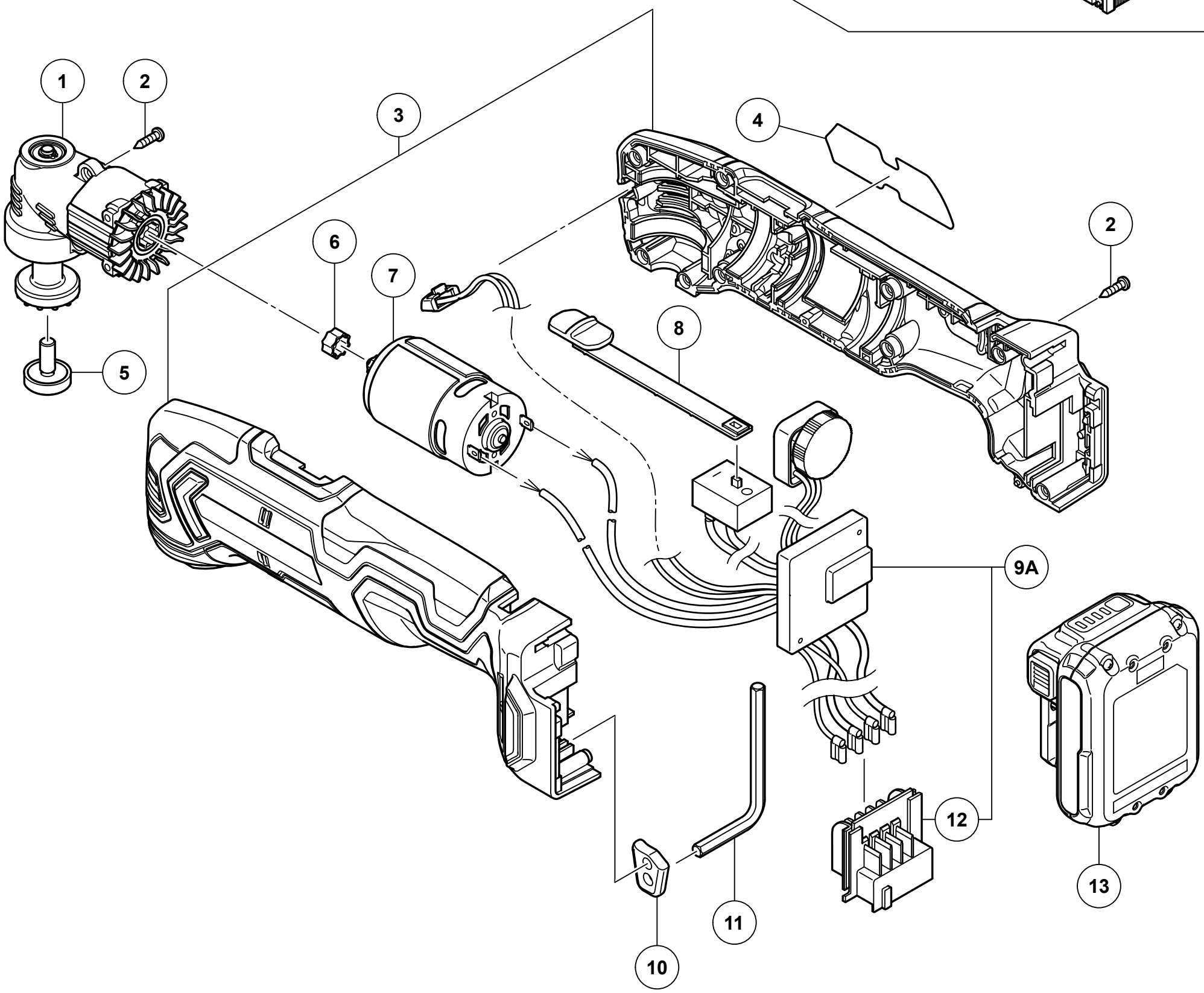

MODEL
CV12DA

Rev.2
15.4.2020

HiKOKI

CORDLESS MULTI TOOLS CV12DA

Item No.	Code No.	Description	No. Used	Remarks
1	376101	HEAD CASE	1	
2	376100	SCREW SET (12 PCS.)	12	
3	376103	HOUSING SET	1	
4		NAME PLATE	1	
5	376099	SPECIAL BOLT	1	
6	376097	SPLINE SHAFT	1	
7	376102	MOTOR	1	
8	376098	SLIDE KNOB	1	
9A	376104	CONTROLLER ASS'Y	1	INCLUD.12
10	376095	WRENCH HOLDER	1	
11	376096	HEX. WRENCH	1	
12	374398	BATTERY TERMINAL	1	
*13	374954	BATTERY BSL 1225M (EUROPE)	2	INCLUD.502
		STANDARD ACCESSORIES		
501		CHARGER(MODEL UC 12SL)	1	
502	374778	BATTERY COVER	1	
503	337685	TOOL BOX	1	
504		MULTI TOOL BLADE(MSD32PBC)	1	
				EPC CODE NO.782721
505		MULTI TOOL BLADE(MSU93D)	1	
				EPC CODE NO.782791
506	338252	SANDING PAPERS 94X94 AA60 (10 PCS.)	1	
506	338253	SANDING PAPERS 94X94 AA80 (10 PCS.)	1	
506	338254	SANDING PAPERS 94X94 AA100 (10 PCS.)	1	
506	338255	SANDING PAPERS 94X94 AA120 (10 PCS.)	1	
506	338257	SANDING PAPERS 94X94 AA180 (10 PCS.)	1	
507	336471	CASE ASS'Y (STACKABLE 2)	1	INCLUD.510-512
508		MULTI TOOL BLADE(MSW85S)	1	
				EPC CODE NO.782741
509	376106	INNER TRAY	1	
510	336472	LATCH	4	
511	336473	HANDLE	1	
512	336474	HINGE	2	
		OPTIONAL ACCESSORIES		
601	376066	DUST COLLECTION ADAPTER SET	1	INCLUD.602
602	376118	FELT PACKING	1	

* ALTERNATIVE PARTS