Hitachi Power Tools

LIST NO. H838

ELECTRIC TOOL PARTS LIST

■ CORDLESS DRIVER DRILL

2009·5·27

Model DS 10DFL

(E1)

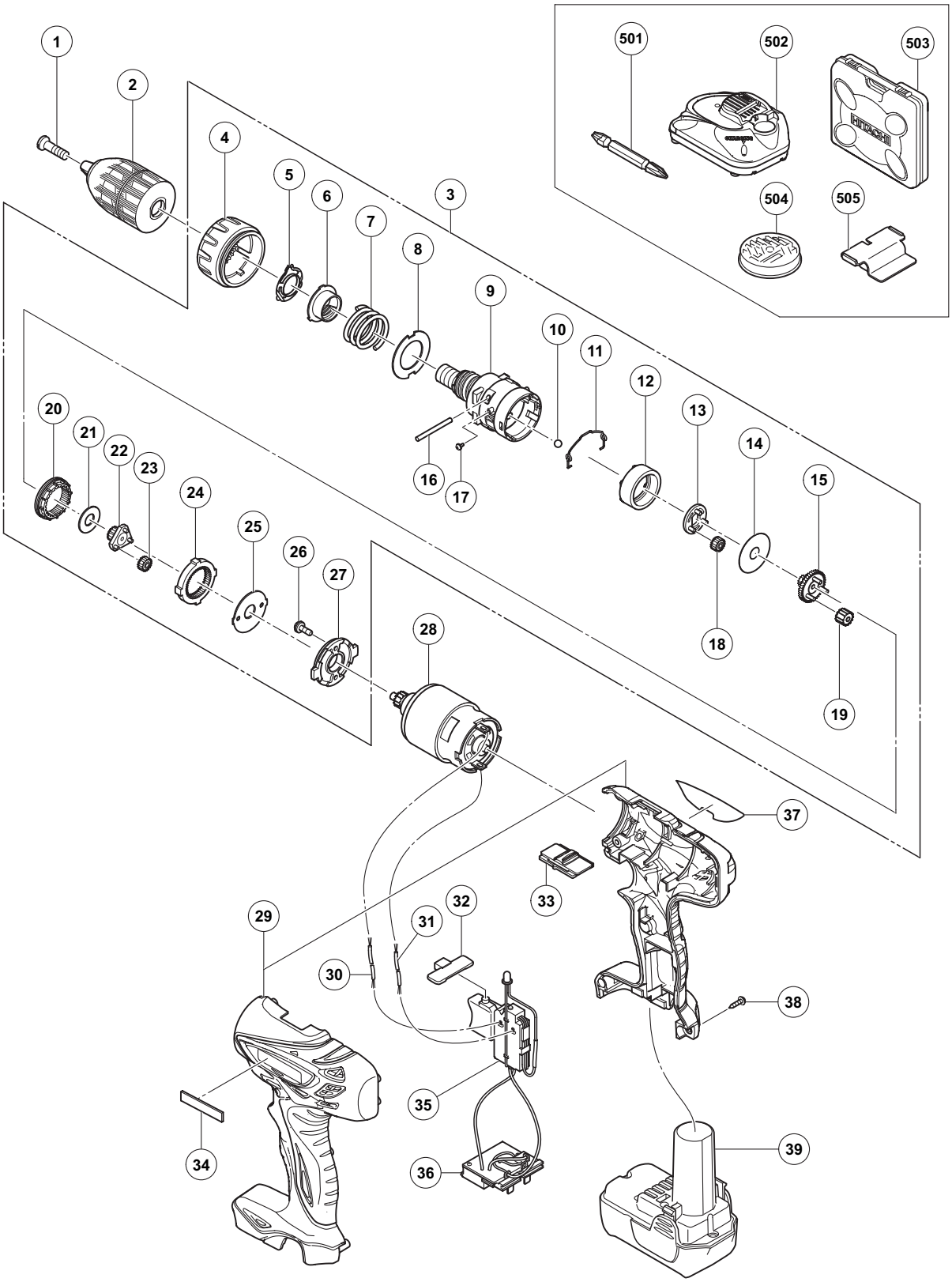

	ITEM NO.	CODE NO.	DESCRIPTION	NO. USED	REMARKS	
	1	325-616	SPECIAL SCREW (LEFT HAND) (B) M5 X 25	1		
*	2	331-602	DRILL CHUCK 10MM (W/O CHUCK WRENCH)	1		
*	2	331-329	DRILL CHUCK 10MM (W/O CHUCK WRENCH)	1	FOR USA, CAN	
	3	331-324	GEAR BOX ASS'Y	1	INCLUD. 4-27	
	4	331-587	CLUTCH DIAL	1		
	5	329-579	CLICK SPRING	1		
	6	331-582	NUT	1		
	7	331-583	SPRING	1		
	8	331-584	THRUST PLATE	1		
	9	331-585	GEAR CASE	1		
	10	306-936	STEEL BALL D5	6		
	11	331-586	SHIFT ARM	1		
	12	331-592	RING GEAR	1		
	13	331-589	CARRIER	1		
	14	331-593	WASHER (B)	1		
	15	331-590	PINION (C)	1		
	16	331-588	NEEDLE	2		
	17	330-579	SCREW SET D2 X 3.5 (2 PCS.)	2		
	18	331-591	PLANET GEAR (C) SET (3 PCS.)	3		
	19	331-595	PLANET GEAR (B) SET (3 PCS.)	3		
	20	331-594	SLIDE RING GEAR	1		
	21	331-599	WASHER (C)	1		
	22	331-596	PINION (B)	1		
	23	331-597	PLANET GEAR (A) SET (3 PCS.)	3		
	24	331-598	FIRST RING GEAR	1		
	25	331-600	WASHER (A)	1		
	26	949-203	MACHINE SCREW M3 X 8 (10 PCS.)	2		
	27	331-601	MOTOR SPACER	1		
	28	331-333	MOTOR DC12V	1		
*	29	331-326	HOUSING (A). (B)SET (GREEN)	1		
*	29	331-328	HOUSING (A). (B) SET (RED)	1		
	30		INTERNAL WIRE (RED)	1		
	31		INTERNAL WIRE (BLACK)	1		
	32	329-548	PUSHING BUTTON (A)	1		
	33	331-332	SHIFT KNOB	1		
	34	330-719	HITACHI LABEL	1		
	35	331-330	DC-SPEED CONTROL SWITCH	1		
	36	331-331	CONTROLLER (B)	1		
	37		NAME PLATE	1		
	38	313-687	TAPPING SCREW (W/FLANGE) D3 X 16 (BLACK)	8		
*	39	331-067	BATTERY BCL 1015 (EUROPE, AUS, NZL)	2	INCLUD. 505	
*	39	331-065	BATTERY BCL 1015 (USA, CAN)	2	INCLUD. 505	

STANDARD ACCESSORIES

	ITEM NO.	CODE NO.	DESCRIPTION	NO. USED	REMARKS	
	501	983-006	+ DRIVER BIT NO.2 65L	1		
	502		CHARGER (MODEL UC 10SFL)	1		
*	503	331-603	CASE	1		
*	503	331-450	CASE	1	FOR USA, CAN	
*	504		BIT SET	1	FOR USA, CAN	
	505	331-086	BATTERY COVER	1		

*ALTERNATIVE PARTS

ITEM NO.	CODE NO.	DESCRIPTION	NO. USED	REMARKS	