# HITACHI

LIST NO. E897

# ELECTRIC TOOL PARTS LIST

## ■CORDLESS DRIVER DRILL

**Model DS 10DV2**

**1996・3・15**
**(E1)**

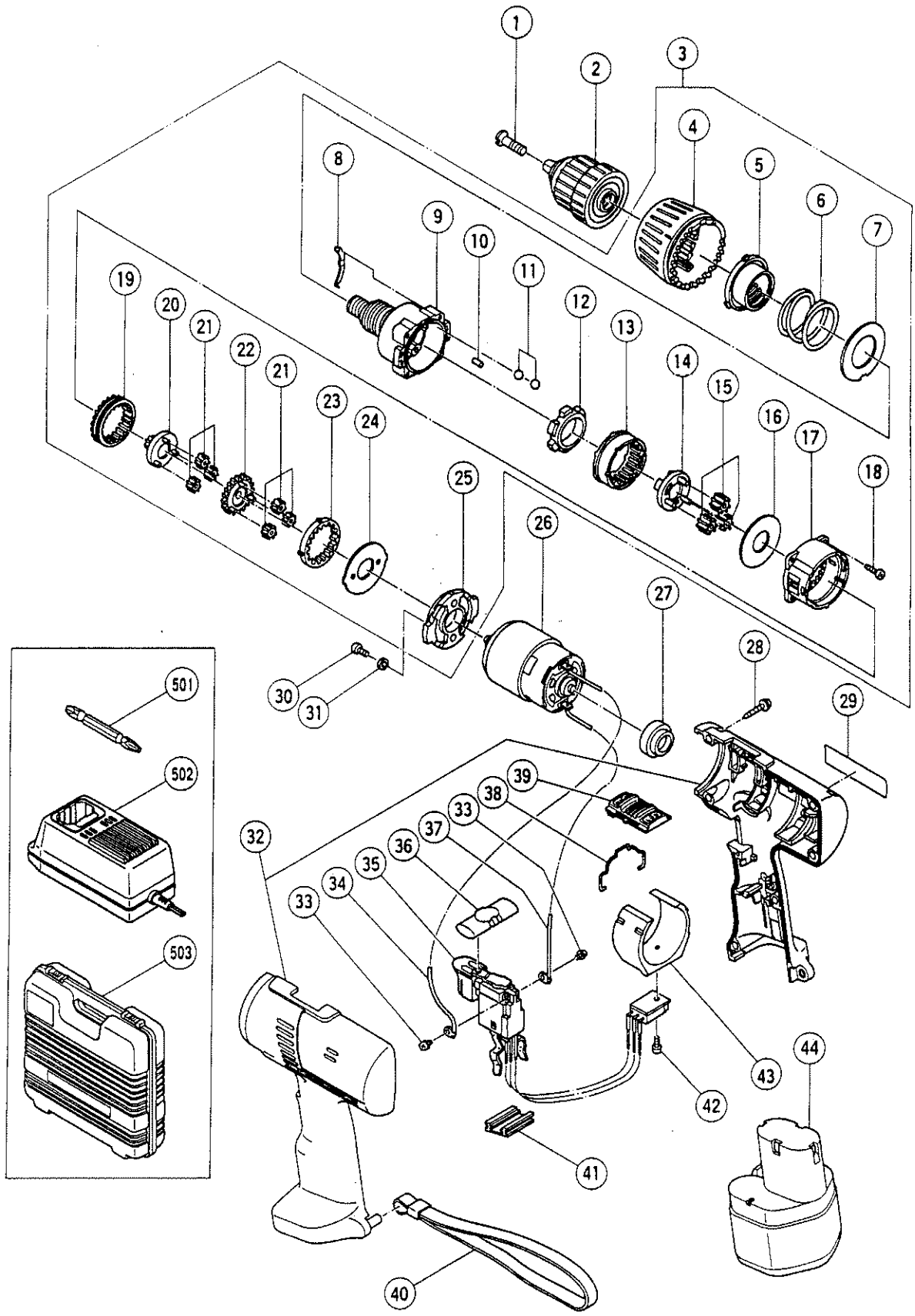

## PARTS

DS 10DV2

| ITEM NO. | CODE NO. | DESCRIPTION | NO. USED | REMARKS | |
|---|---|---|---|---|---|
| 1 | 311-959 | SPECIAL SCREW (LEFT HAND) M6X23 | 1 | | |
| 2 | 311-493 | DRILL CHUCK 10VLRA – N (W/O CHUCK HANDLE) | 1 | | |
| 3 | 311-960 | GEAR BOX ASS'Y | 1 | INCLUD.4 – 25 | |
| 4 | 312-711 | CAP | 1 | | |
| 5 | 312-710 | NUT | 1 | | |
| 6 | 312-709 | SPRING | 1 | | |
| 7 | 312-714 | WASHER (D) | 1 | | |
| 8 | 312-713 | CRICK SPRING | 1 | | |
| 9 | 312-696 | FRONT CASE | 1 | | |
| 10 | 312-708 | NEEDLE ROLLER (C) SET (6 PCS.) | 6 | | |
| 11 | 306-936 | STEEL BALL | 12 | | |
| 12 | 312-707 | LOCK RING | 1 | | |
| 13 | 312-715 | RING GEAR | 1 | | |
| 14 | 312-706 | CARRIER | 1 | | |
| 15 | 312-705 | PLANET GEAR (C) SET (3 PCS.) | 3 | | |
| 16 | 312-704 | WASHER (A) | 1 | | |
| 17 | 312-697 | REAR CASE | 1 | | |
| 18 | 312-712 | SCREW SET D3X12 (4 PCS.) | 4 | | |
| 19 | 312-703 | SLIDE RING GEAR | 1 | | |
| 20 | 312-702 | PINION (C) | 1 | | |
| 21 | 312-699 | PLANET GEAR (A) SET (6 PCS.) | 6 | | |
| 22 | 312-701 | PINION (B) | 1 | | |
| 23 | 312-700 | FIRST RING GEAR | 1 | | |
| 24 | 312-716 | WASHER (B) | 1 | | |
| 25 | 312-698 | MOTOR SPACER | 1 | | |
| 26 | 311-970 | MOTOR | 1 | | |
| 27 | 311-971 | SPACER | 1 | | |
| 28 | 991-672 | TAPPING SCREW (W/WASHER) D3X16 | 7 | | |
| 29 | | NAME PLATE | 1 | | |
| 30 | 949-214 | MACHINE SCREW M4X6 (10 PCS.) | 2 | | |
| 31 | 949-453 | SPRING WASHER M4 (10 PCS.) | 2 | | |
| 32 | 312-000 | HOUSING (A).(B) SET | 1 | | |
| 33 | 994-532 | MACHINE SCREW (W/SP. WASHER) M3X5 | 2 | | |
| 34 | 311-967 | INTERNAL WIRE (BLACK) | 1 | | |
| 35 | 311-964 | DC – SPEED CONTROL SWITCH | 1 | | |
| 36 | 306-151 | PUSHING BUTTON | 1 | | |
| 37 | 311-966 | INTERNAL WIRE (RED) | 1 | | |
| 38 | 311-962 | SHIFT ARM | 1 | | |
| 39 | 311-961 | SHIFT KNOB | 1 | | |
| 40 | 306-952 | STRAP | 1 | | |
| 41 | 991-666 | TERMINAL SUPPORT | 1 | | |
| 42 | 306-039 | BIND SCREW M3X7 | 1 | | |
| 43 | 311-965 | FIN | 1 | | |
| 44 | 310-377 | BATTERY EB 9B (W/ENGLISH N.P.) | 1 | | |
| | | | | | |
| | | | | | |
| | | | | | |
| | | | | | |
| | | | | | |
| | | | | | |
| | | | | | |

★: ALTERNATIVE PARTS

## STANDARD ACCESSORIES

| ITEM NO. | CODE NO. | DESCRIPTION | NO. USED | REMARKS | |
|---|---|---|---|---|---|
| 501 | 983-006 | + DRIVER BIT NO.2 65L | 1 | | |
| 502 | | CHARGER (MODEL UC 12YD) | 1 | | |
| 503 | 311-969 | CASE | 1 | | |

## OPTIONAL ACCESSORIES

| ITEM NO. | CODE NO. | DESCRIPTION | NO. USED | REMARKS | |
|---|---|---|---|---|---|
| 601 | 983-004 | + DRIVER BIT NO.1 65L | 1 | | |
| 602 | 983-011 | + DRIVER BIT NO.3 65L | 1 | | |
| 603 | 955-657 | − DRIVER BIT (A) 3MMX70L | 1 | | |
| 604 | 955-659 | − DRIVER BIT (A) 4MMX70L | 1 | | |
| 605 | 955-674 | − DRIVER BIT (A) 6MMX70L | 1 | | |
| 606 | 308-090 | HOOK (FOR CORDLESS TOOLS) | 1 | | |
| 607 | 307-824 | HOLSTER | 1 | | |

★ : ALTERNATIVE PARTS