HITACHI

LIST NO. E879

ELECTRIC TOOL PARTS LIST

■CORDLESS DRIVER DRILL

Model FDS 10DT

1994・6・5

(E1)

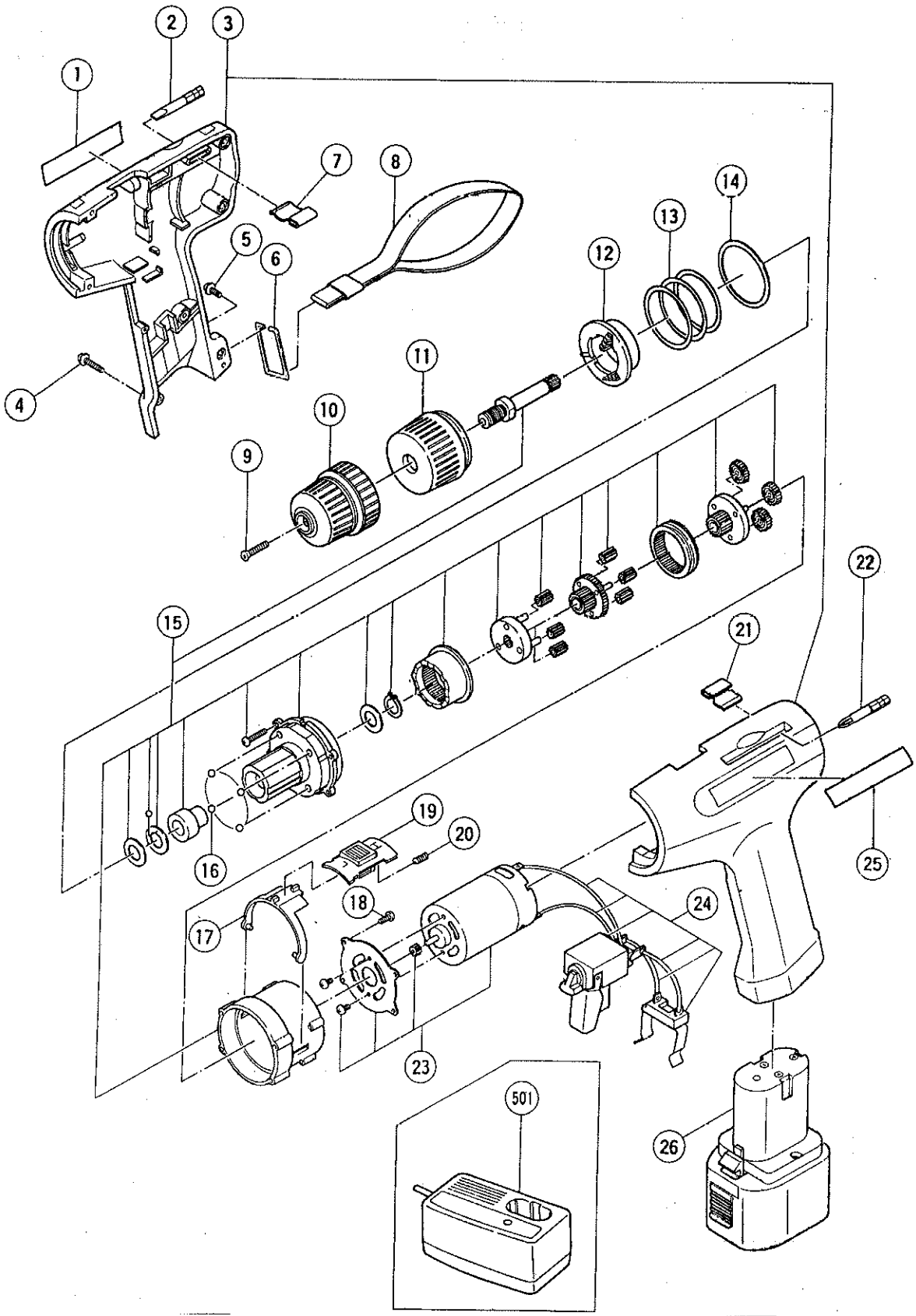

PARTS

FDS 10DT

ITEM NO.	CODE NO.	DESCRIPTION	NO. USED	REMARKS	
* 1		NAME PLATE	1		
2	308-511	– DRIVER BIT 4MMX50L	1		
3	309-618	HOUSING (A).(B) SET	1		
4	309-614	TAPPING SCREW (W/FLANGE) D3X14	6		
5	309-615	TAPPING SCREW (W/FLANGE) D3X6	1		
6	309-616	FOOK	1		
7	309-611	BIT HOLDER (B)	1		
8	309-617	STRAP	1		
9	980-836	FLAT HD. SCREW (LEFT HAND) M5X20	1		
10	303-915	DRILL CHUCK 10TLRA – N (W/O CHUCK HANDLE)	1		
11	309-599	CAP	1		
12	309-600	SPRING HOLDER	1		
13	309-601	SPRING	1		
14	309-602	THRUST PLATE	1		
15	309-604	SPINDLE AND GEAR SET	1		
16	309-603	STEEL BALL	4		
17	309-607	SHIFT ARM	1		
18	309-606	TAPPING SCREW D3X8	4		
19	309-608	SHIFT KNOB	1		
20	309-609	SHIFT SPRING	1		
21	309-612	BIT HOLDER (A)	1		
22	308-510	+DRIVER BIT NO.2X50L	1		
23	309-605	MOTOR	1		
24	309-610	SWITCH	1		
25		HITACHI LABEL	1		
26	309-365	BATTERY FEB 7 744086	1		

STANDARD ACCESSORIES

ITEM NO.	CODE NO.	DESCRIPTION	NO. USED	REMARKS	
501		CHAGER (MODEL UC 7SC)	1		

*: ALTERNATIVE PARTS

Printed in Japan 6 – 94