# Hitachi Power Tools

LIST NO. H851

# ELECTRIC TOOL PARTS LIST

## ■ CORDLESS COMBO KIT

**2009·11·6**

## Model KC 18DHL

**(E1)**

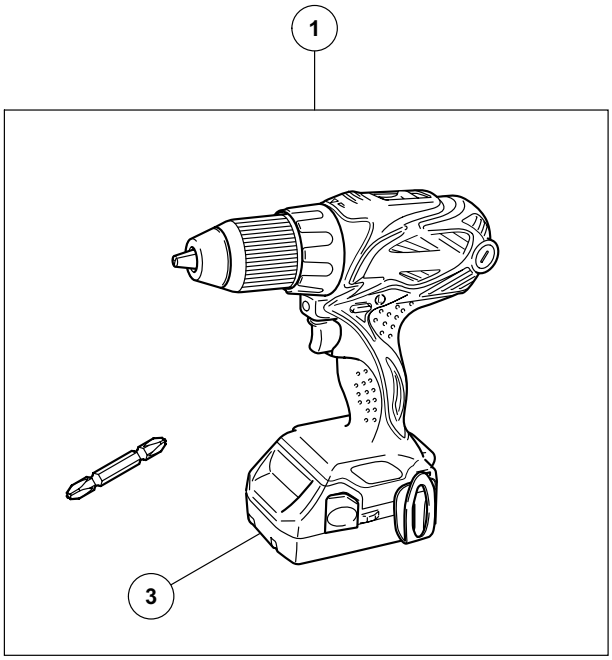


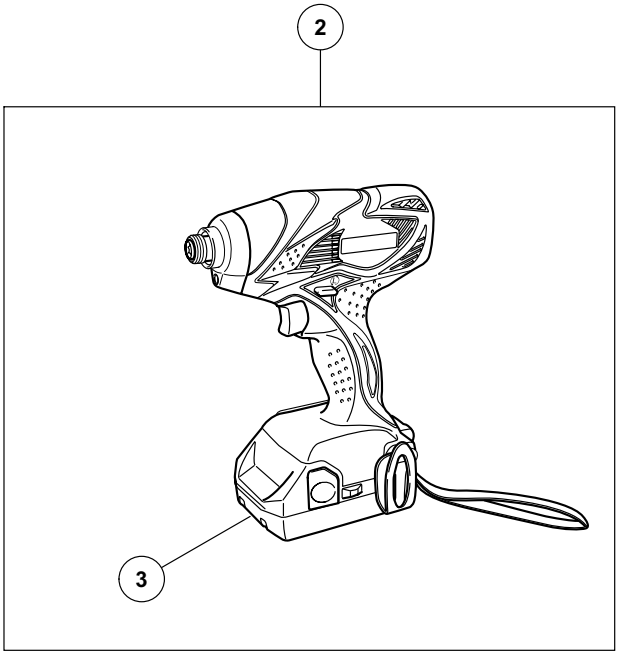


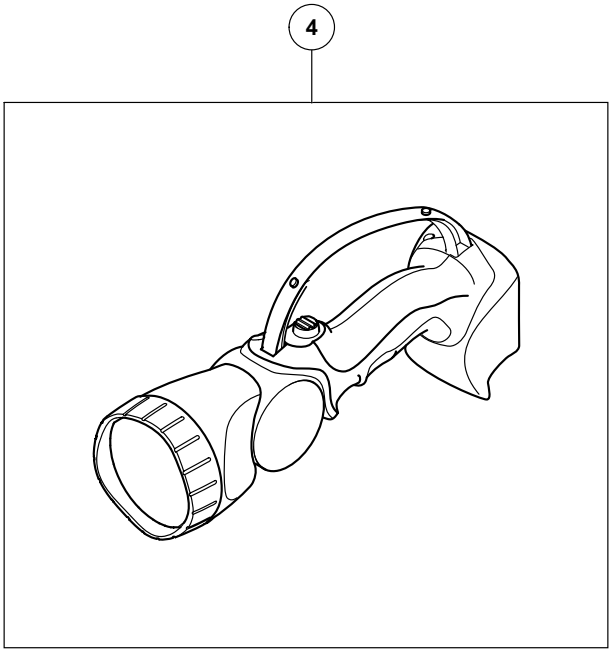


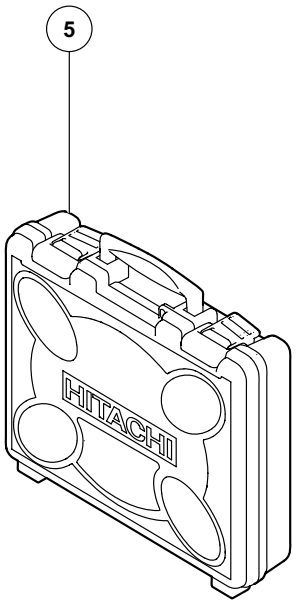


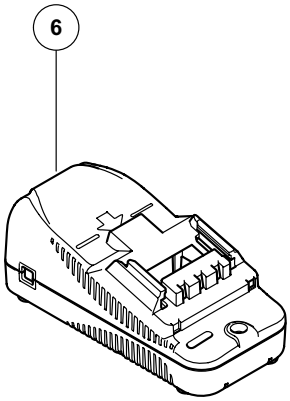

## PARTS

KC 18DHL

| | ITEM NO. | CODE NO. | DESCRIPTION | NO. USED | REMARKS | |
|---|---|---|---|---|---|---|
| | 1 | | MODEL DS 18DSAL CORDLESS DRIVER DRILL | 1 | | |
| | 2 | | MODEL WH 18DSAL CORDLESS IMPACT DRIVER | 1 | | |
| * | 3 | 330-557 | BATTERY BSL 1815X (EUROPE) | 2 | | |
| * | 3 | 330-139 | BATTERY BSL 1815X (USA, CAN) | 2 | | |
| * | 4 | | MODEL UB 18DAL CORDLESS TORCHLIGHT | 1 | FOR USA | |
| | 5 | 331-291 | CASE | 1 | | |
| | 6 | | MODEL UC 18YGSL CHARGER | 1 | | |



*ALTERNATIVE PARTS

Printed in Japan 11 - 09
(091106N)