Hitachi Power Tools

LIST NO. H875

ELECTRIC TOOL PARTS LIST

■ CORDLESS CLEANER

2010·8·5

Model R 7D

(E1)

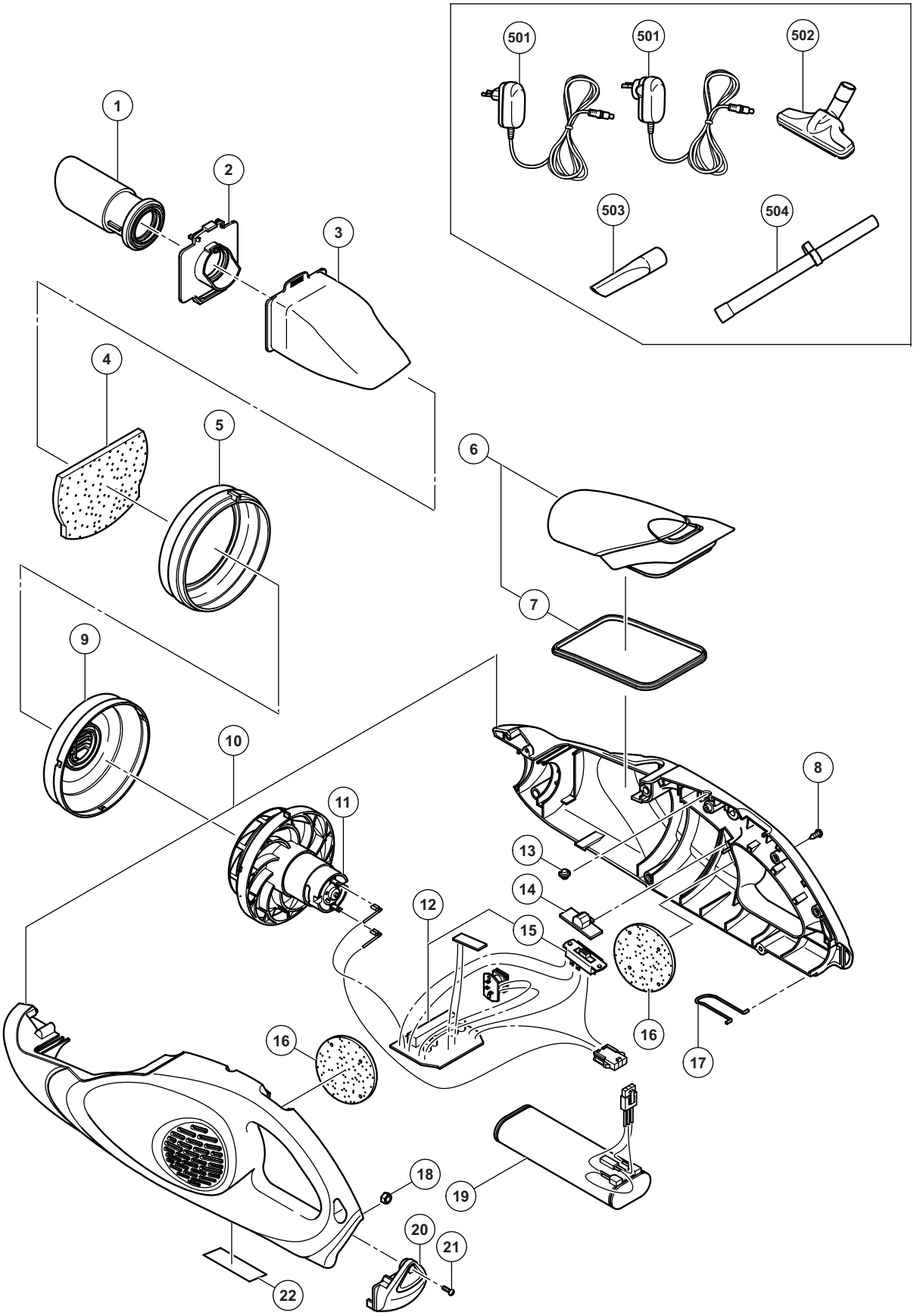

PARTS

R 7D

	ITEM NO.	CODE NO.	DESCRIPTION	NO. USED	REMARKS	
	1	332-698	NOZZLE	1		
	2	333-237	DUST STOPPER	1		
	3	333-232	DUST BAG	1		
	4	332-694	FILTER (A)	1		
	5	332-693	RUBBER COVER	1		
	6	332-696	FRONT COVER ASS'Y	1	INCLUD. 7	
	7	332-697	RUBBER PACKING	1		
	8	332-703	TAPPING SCREW D3 X 16	8		
	9	332-692	FAN GUIDE (A)	1		
	10	332-686	HOUSING (A). (B) SET	1		
	11	332-691	MOTOR FAN	1		
	12	332-689	WIRING ASS'Y	1	INCLUD. 15	
	13	332-690	LENS	1		
	14	333-231	SWITCH COVER	1		
	15	332-687	SLIDE SWITCH	1		
	16	332-695	FILTER (B)	2		
	17	332-702	HOOK	1		
	18	332-705	NUT M4	1		
*	19	333-235	BATTERY 7.2V 1.5AH (EUROPE)	1		
*	19	333-236	BATTERY 7.2V 1.5AH (AUS,NZL)	1		
	20	332-699	BATTERY CAP	1		
	21	332-704	SCREW M4 X 10	1		
	22		NAME PLATE	1		

STANDARD ACCESSORIES

	ITEM NO.	CODE NO.	DESCRIPTION	NO. USED	REMARKS	
*	501	333-233	CHARGER (EUROPE)	1		
*	501	333-234	CHARGER (AUS,NZL)	1		
	502	332-708	FLOORING NOZZLE	1		
	503	332-709	CREVICE NOZZLE	1		
	504	332-710	EXTENSION PIPE (W/NOZZLE HOLDER)	1		

*ALTERNATIVE PARTS

Printed in Japan
(100805N)