Assembly Diagram for UC 12SD

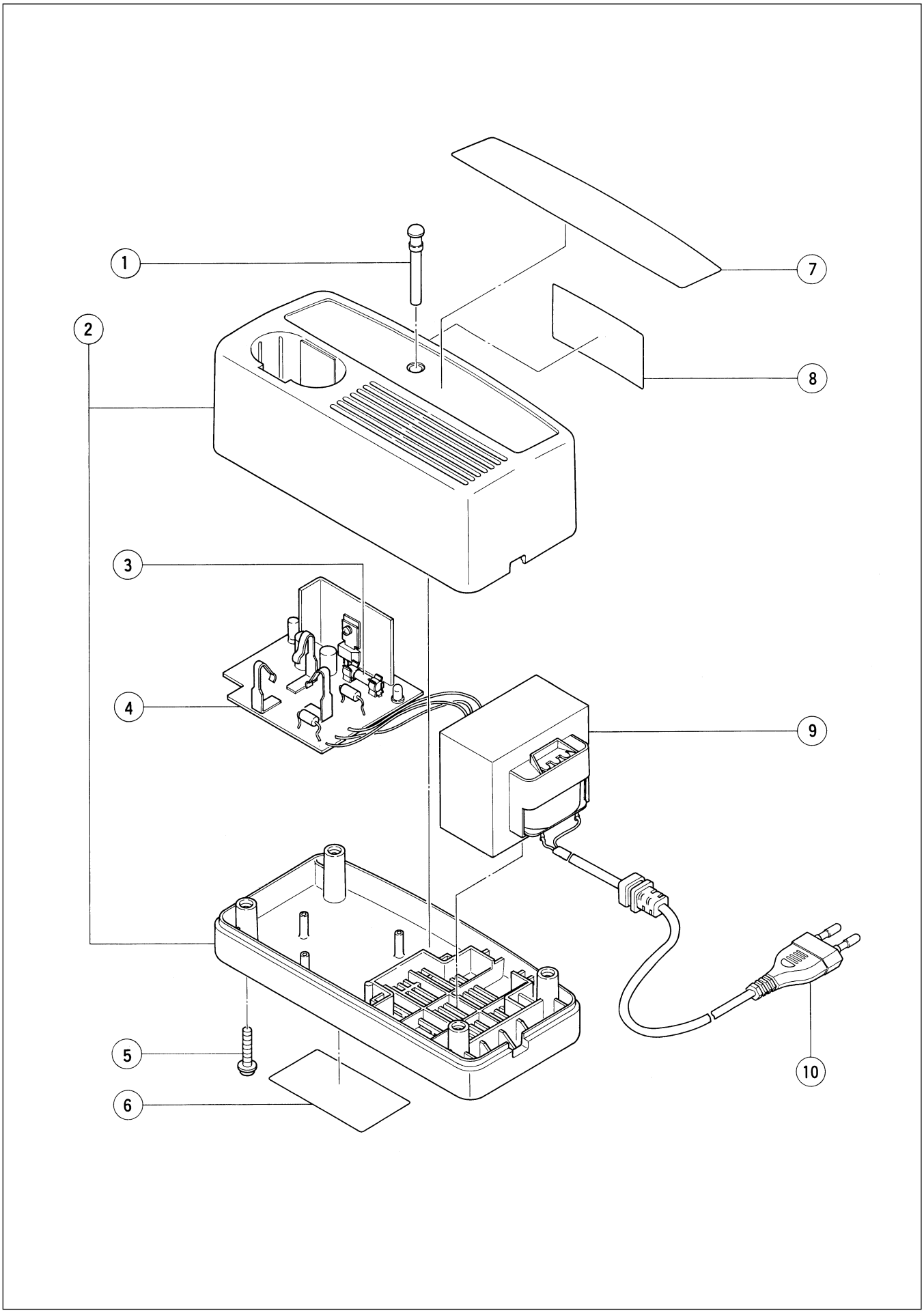

	ITEM NO.	CODE NO.	DESCRIPTION	NO. USED	REMARKS	
	1	318-258	LIGHT BAR	1		
*	2	318-249	CASE (A).(B) SET	1		
*	2	318-250	CASE (A).(B) SET	1	FOR AUS	
	3	314-972	FUSE (6.3A/250V)	1		
	4	318-256	PRINTED CIRCUIT BOARD	1		
	5	994-806	SCREW (PLASTIC TIE) D4X20	4		
	6		NAME PLATE	1		
	7		HITACHI LABEL	1		
	8		CAUTION LABEL	1		
*	9	318-252	TRANSFORMER 120V	1		
*	9	318-253	TRANSFORMER 220V	1		
*	9	318-254	TRANSFORMER 230V	1		
*	9	318-255	TRANSFORMER 240V	1		
*	10	318-262	CORD	1		
*	10	318-259	CORD	1	FOR USA,CAN	
*	10	318-260	CORD	1	FOR NZL,AUS	
*	10	318-261	CORD	1	FOR GBR,THA	

* : ALTERNATIVE PARTS

Printed in Japan 9 – 99
(99910 N)