Hitachi Power Tools

LIST NO. J861

ELECTRIC TOOL PARTS LIST

■ CHARGER

2013·6·20

Model UC 18YFSL

(E1)

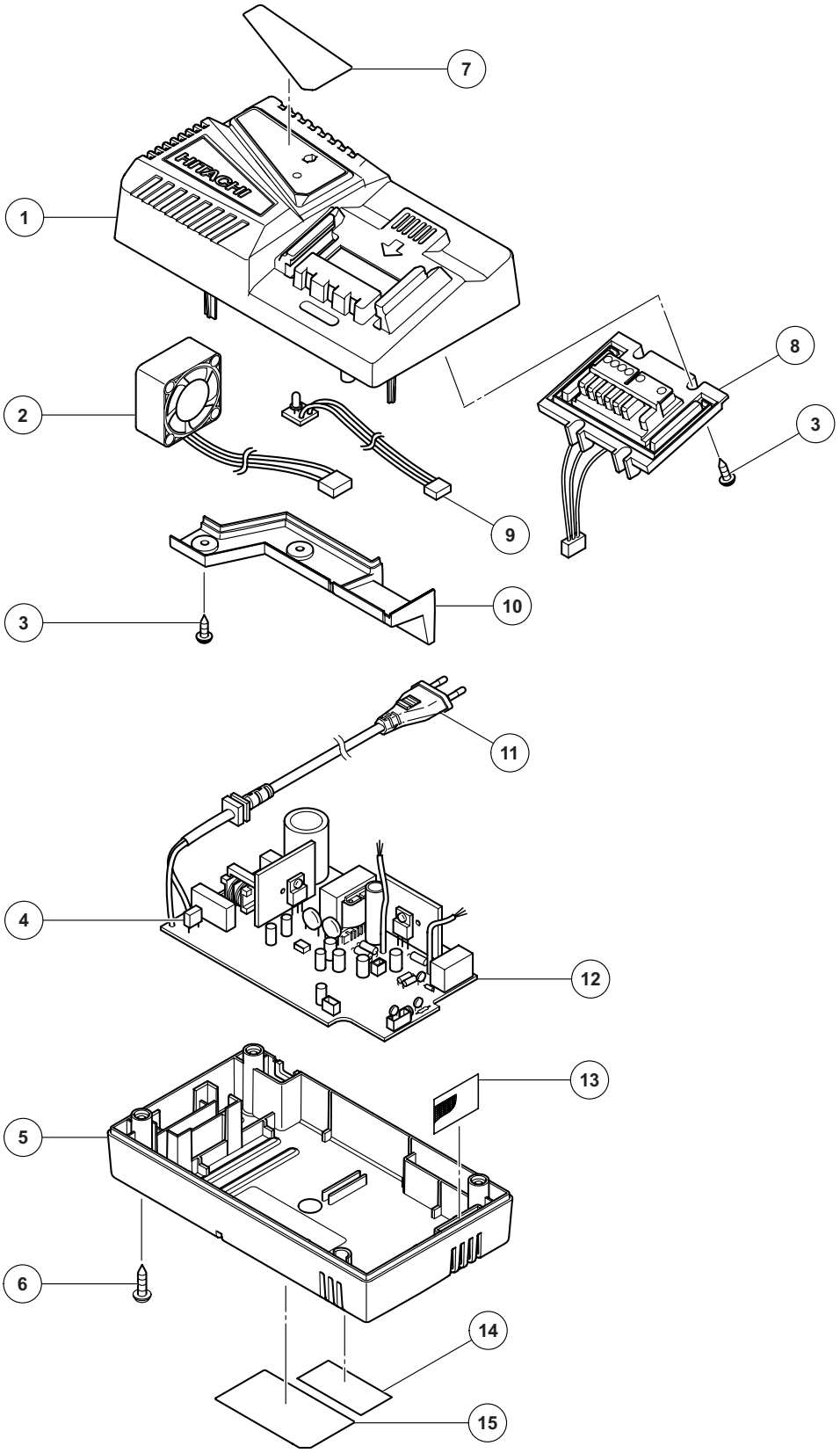

	ITEM NO.	CODE NO.	DESCRIPTION	NO. USED	REMARKS	
	1	336-269	CASE (A)	1		
	2	336-272	FAN	1		
	3	327-174	TP TAPPING SCREW D3 X 8	5		
	4	332-540	FUSE (T3.15 A/250 V)	1		
	5	336-270	CASE (B)	1		
	6	326-358	TAPPING SCREW (W/FLANGE) D3 X 18	4		
*	7	336-273	HITACHI LABEL	1		
*	7	336-274	HITACHI LABEL	1	FOR AUS, NZL	
	8	336-277	TERMINAL HOLDER	1		
	9	336-276	LED-PRINTED CIRCUIT BOARD	1		
	10	336-271	AIR DUCT	1		
*	11	336-279	CORD	1		
*	11	336-281	CORD	1	FOR GBR, UAE, HKG, SAU	
*	11	336-283	CORD	1	FOR SIN, VIE, IND, KOR	
*	11	336-280	CORD	1	FOR USA, CAN, MEX	
*	11	336-282	CORD	1	FOR AUS, NZL	
*	11	336-285	CORD	1	FOR BRA	
*	11	336-278	CORD	1	FOR CHN	
*	11	336-284	CORD	1	FOR TPE	
*	12	336-287	PRINTED CIRCUIT BOARD ASS'Y 110 V-127 V	1	INCLUD. 4	
*	12	336-288	PRINTED CIRCUIT BOARD ASS'Y 220 V-240 V	1	INCLUD. 4	
	13	336-275	FILTER	1		
*	14		NAME PLATE	1	FOR USA, CAN	
*	15		NAME PLATE	1	EXCEPT FOR USA, CAN	