Hitachi Power Tools

LIST NO. H831

ELECTRIC TOOL PARTS LIST

■ CHARGER

2009·1·29

Model UC 18YGSL

(E1)

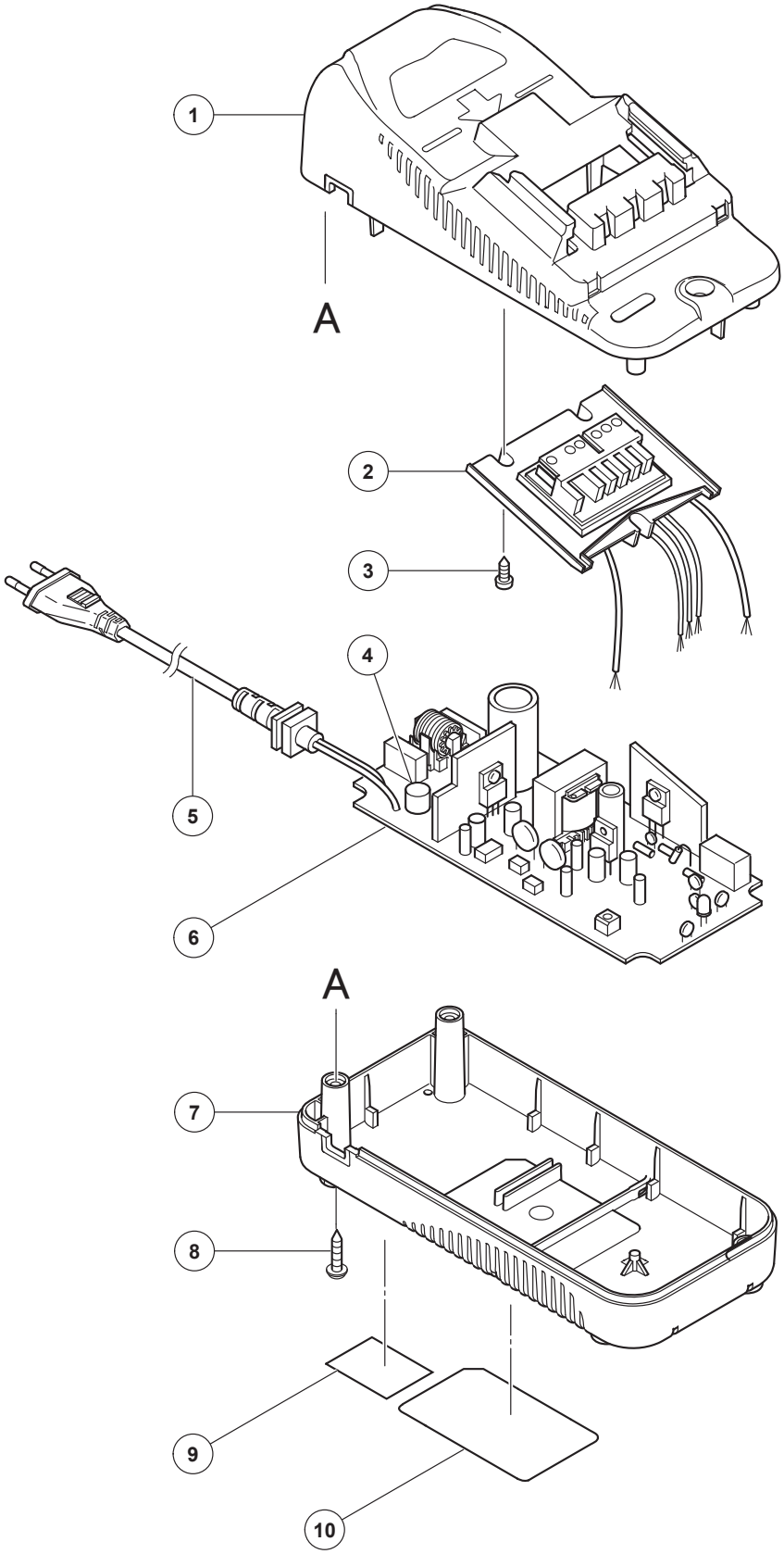

	ITEM NO.	CODE NO.	DESCRIPTION	NO. USED	REMARKS	
	1	330-691	CASE (A) ASS'Y	1		
	2	330-693	TERMINAL HOLDER	1		
	3	327-174	TP TAPPING SCREW D3X8	3		
	4	329-858	FUSE (3.15A)	1		
*	5	329-853	CORD	1		
*	5	329-856	CORD	1	FOR GBR (230V)	
*	5	329-854	CORD	1	FOR USA, CAN	
*	5	329-855	CORD	1	FOR AUS, NZL	
*	6		PRINTED CIRCUIT BOARD ASS'Y 120V	1	INCLUD. 4	
*	6		PRINTED CIRCUIT BOARD ASS'Y 220V-230V	1	INCLUD. 4	
	7	330-692	CASE (B)	1		
	8	326-358	TAPPING SCREW (W/FLANGE) D3X18	4		
*	9		NAME PLATE	1	FOR USA, CAN	
	10		NAME PLATE	1		