Hitachi Power Tools

LIST NO. G891

ELECTRIC TOOL PARTS LIST

■ CHARGER

2007・12・25

Model UC 18YRSL

(E1)

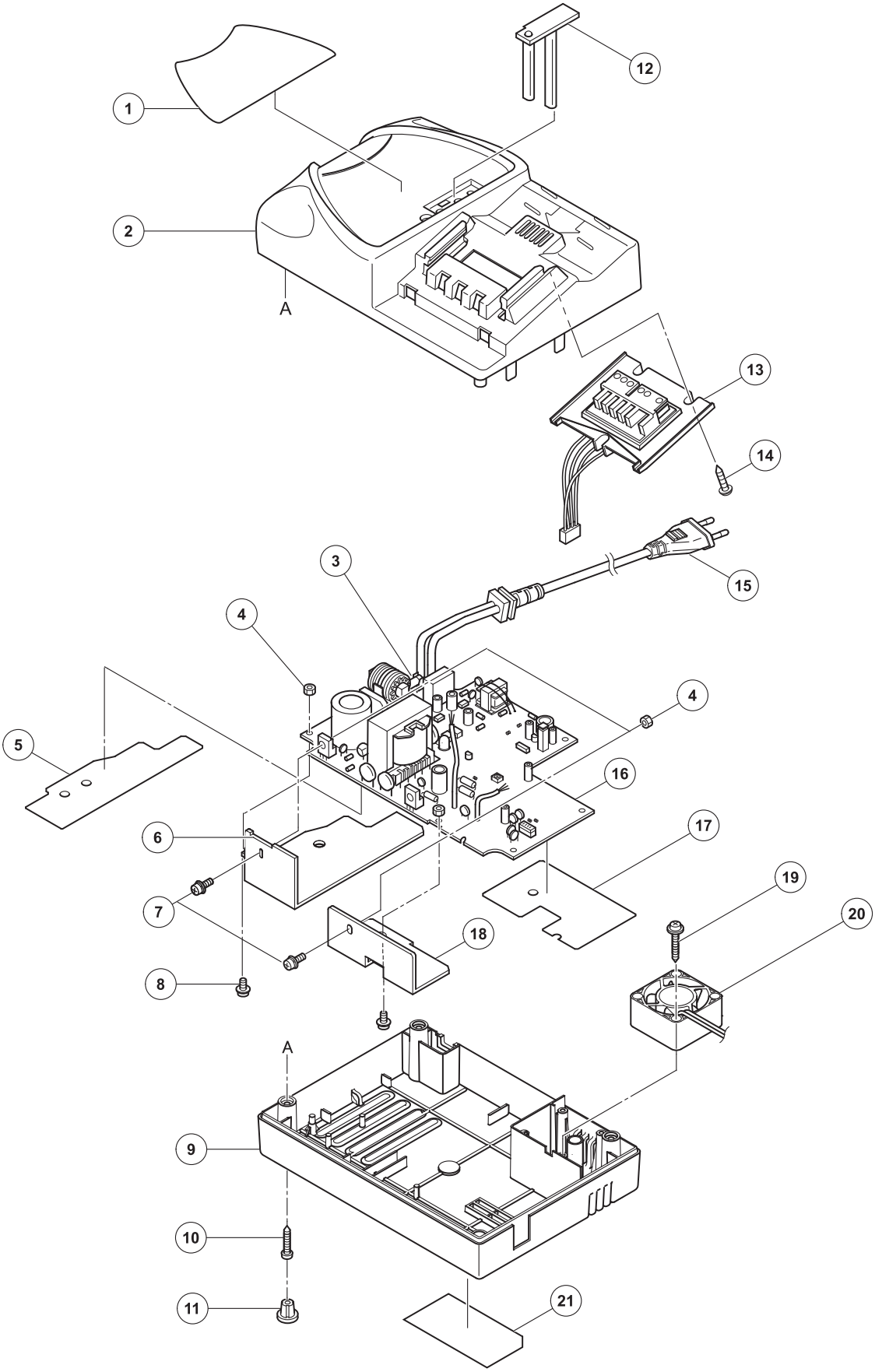

	ITEM NO.	CODE NO.	DESCRIPTION	NO. USED	REMARKS	
	1	329-047	HITACHI LABEL	1		
	2	329-040	CASE (A)	1		
	3	324-736	FUSE (250V-3.15A)	1		
	4	949-553	NUT M3 (10 PCS.)	4		
	5	329-045	INSULATOR (A)	1		
	6	329-043	FIN (A)	1		
	7	306-622	MACHINE SCREW (W/WASHERS) M3X10	2		
	8	993-963	MACHINE SCREW (W/WASHERS) M3X12	2		
	9	329-041	CASE (B)	1		
	10	326-358	TAPPING SCREW (W/FLANGE) D3X18	4		
	11	327-173	CASE RUBBER	4		
	12	328-528	PRISM	1		
	13	328-530	TERMINAL HOLDER	1		
	14	327-174	TP TAPPING SCREW D3X8	3		
*	15	328-634	CORD	1		
*	15	328-636	CORD	1	FOR GBR	
	16		PRINTED CIRCUIT BOARD ASS'Y	1	INCLUD. 3	
	17	329-046	INSULATOR (B)	1		
	18	329-044	FIN (B)	1		
	19	327-175	TAPPING SCREW (W/FLANGE) D3X25	2		
	20	326-809	FAN	1		
	21		NAME PLATE	1		

*ALTERNATIVE PARTS

Printed in Japan 12 - 07
(071225N)