Assembly Diagram for UC 24YC

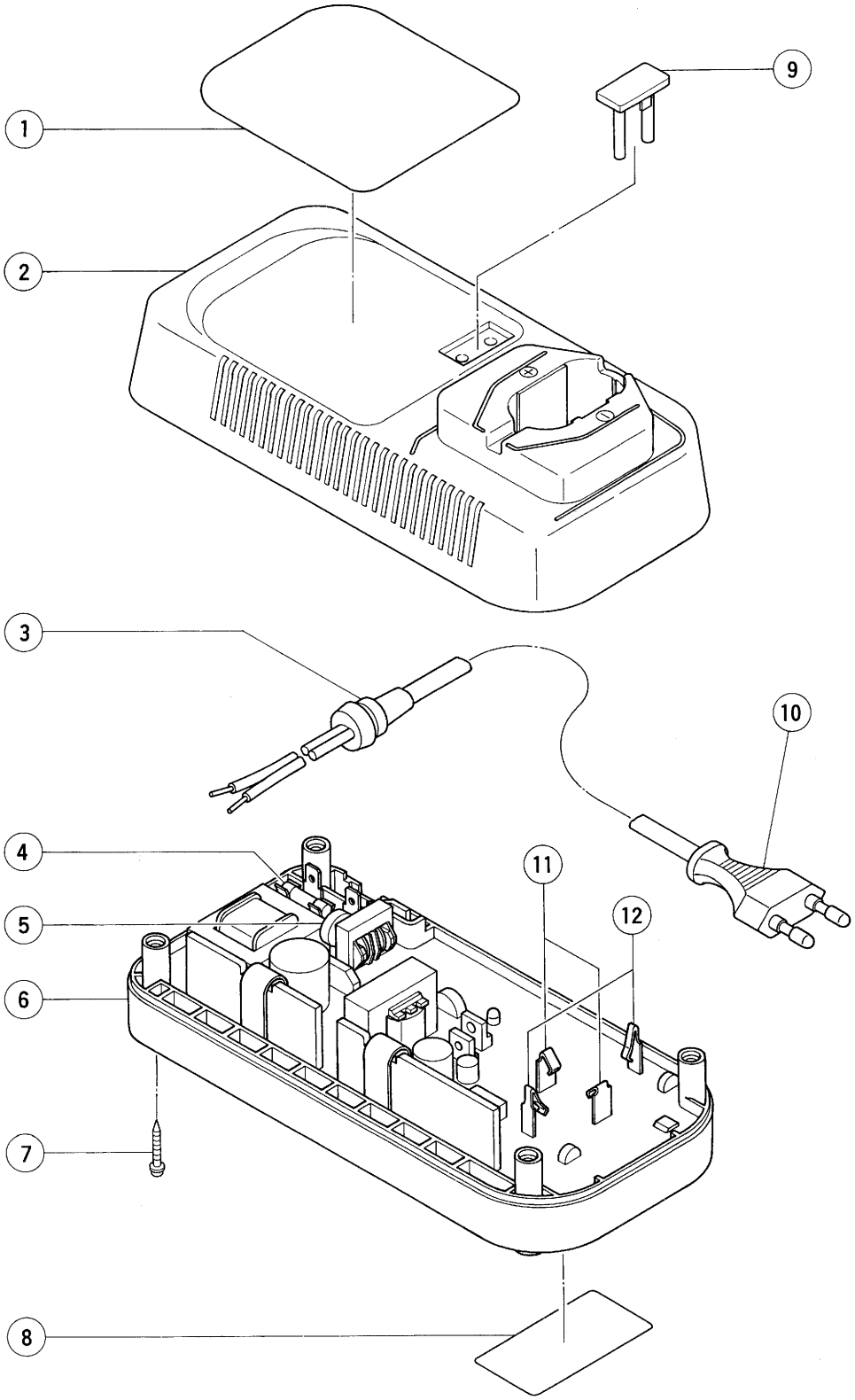

	ITEM NO.	CODE NO.	DESCRIPTION	NO. USED	REMARKS	
	1		HITACHI LABEL	1		
	2	315-150	CASE (A)	1		
	3	991-167	CORD ARMOR	1		
	4	307-658	FUSE (3.15A)	1		
	5	305-087	VARISTOR	1		
	6	319-086	CASE (B) ASS'Y	1	INCLUD.4,5,8,11,12	
	7	300-036	TAPPING SCREW (W/FLANGE) D3X20	4		
	8		NAME PLATE	1		
	9	315-151	PRISM	1		
*	10	307-216	CORD	1	FOR GBR	
*	10	980-642Z	CORD	1	FOR NOR	
	11	306-880	TERMINAL (A)	1		
	12	306-881	TERMINAL (B)	1		

* : ALTERNATIVE PARTS

Printed in Japan 4 – 00
(000425 N)