Hitachi Power Tools

LIST NO. J836

ELECTRIC TOOL PARTS LIST

■ CHARGER

2012·11·12

Model UC 36YRSL

(E1)

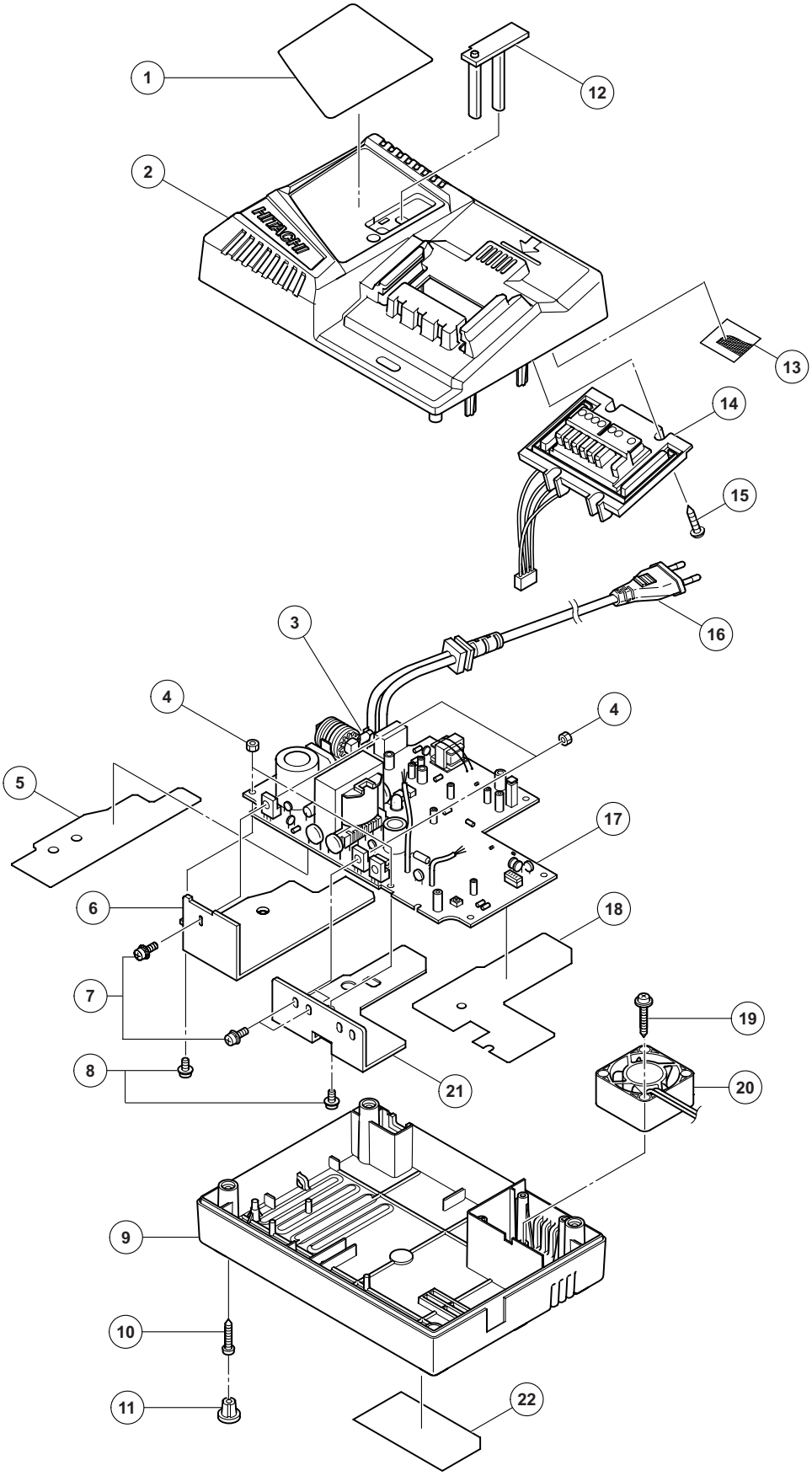

	ITEM NO.	CODE NO.	DESCRIPTION	NO. USED	REMARKS	
	1	335-295	HITACHI LABEL	1		
	2	335-291	CASE (A)	1		
	3	333-507	FUSE (T3.15 A/250 V)	1		
	4	949-553	NUT M3 (10 PCS.)	5		
	5	329-045	INSULATOR (A)	1		
	6	329-043	FIN (A)	1		
	7	993-963	MACHINE SCREW (W/WASHERS) M3 X 12	3		
	8	306-622	MACHINE SCREW (W/WASHERS) M3 X 10	2		
	9	329-041	CASE (B)	1		
	10	326-358	TAPPING SCREW (W/FLANGE) D3 X 18	4		
	11	327-173	CASE RUBBER	4		
*	12	328-528	PRISM	1		
*	12	335-336	PRISM	1	FOR USA, CAN	
	13	328-531	FILTER	1		
	14	335-294	TERMINAL HOLDER	1		
	15	327-174	TP TAPPING SCREW D3 X 8	4		
*	16	328-634	CORD	1		
*	16	335-337	CORD (USA)	1	FOR USA, CAN	
*	16	328-635	CORD	1	FOR AUS, NZL	
*	16	328-636	CORD	1	FOR GBR	
*	17	335-293	PRINTED CIRCUIT BOARD ASS'Y 230 V-240 V	1	INCLUD. 3	
*	17	335-292	PRINTED CIRCUIT BOARD ASS'Y 120 V	1	INCLUD. 3 FOR USA, CAN	
	18	333-239	INSULATOR (B)	1		
	19	327-175	TAPPING SCREW (W/FLANGE) D3 X 25	2		
	20	326-809	FAN	1		
	21	333-238	FIN (B)	1		
	22		NAME PLATE	1		

*ALTERNATIVE PARTS

Printed in Japan 11 - 12
(121112N)