HITACHI

LIST NO. E881

ELECTRIC TOOL PARTS LIST

■ CHARGER
Model UC 7SC

1994 • 12 • 20
(E1)

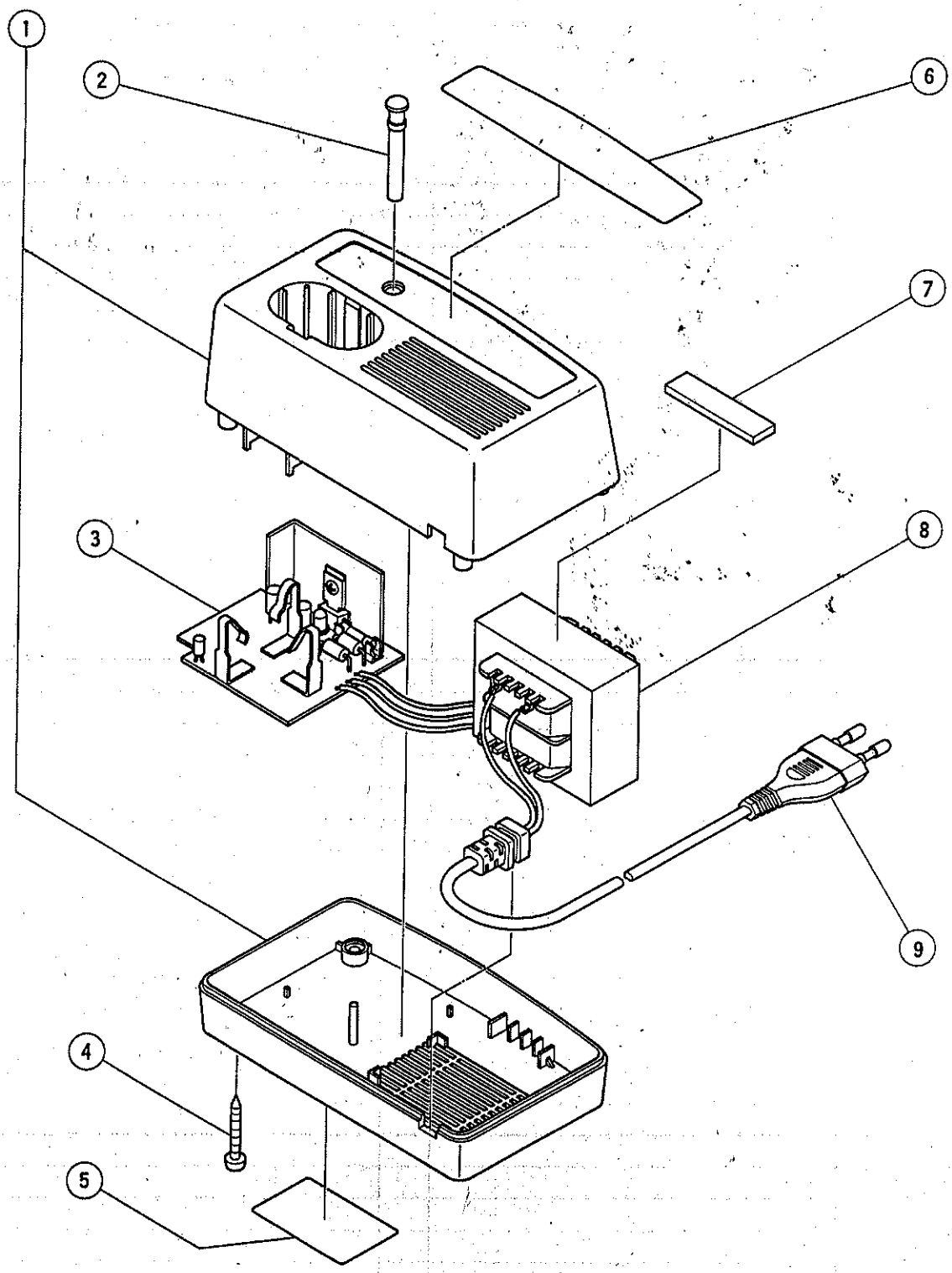

PARTS

UC7SC

ITEM NO.	CODE NO.	DESCRIPTION	NO. USED	REMARKS	
1	310-303	HOUSING	1		
2	310-304	LIGHT BAR	1		
3		PRINTED CIRCUIT BOARD	1	REPLACE THE WHOLE UNIT WITH NEW ONE	
4	310-305	TAPPING SCREW D4 × 25	4		
5		NAME PLATE	1		
6		HITACHI LABEL	1		
7	310-301	SPONGE	1		
8		TRANSFORMER 230V	1	REPLACE THE WHOLE UNIT WITH NEW ONE	
9	310-306	CORD	1	FOR ITA, FRG, HOL, AUT, SWE, FRA, FIN,	
				BEL, DEN, NOR	
9		CORD	1	FOR GBR REPLACE THE WHOLE UNIT	
				WITH NEW ONE	

★: ALTERNATIVE PARTS

Printed in Japan 12 – 94