HITACHI

LIST NO. F882

ELECTRIC TOOL PARTS LIST

■ CHARGER

2003・2・25

Model UC 7SD

(E1)

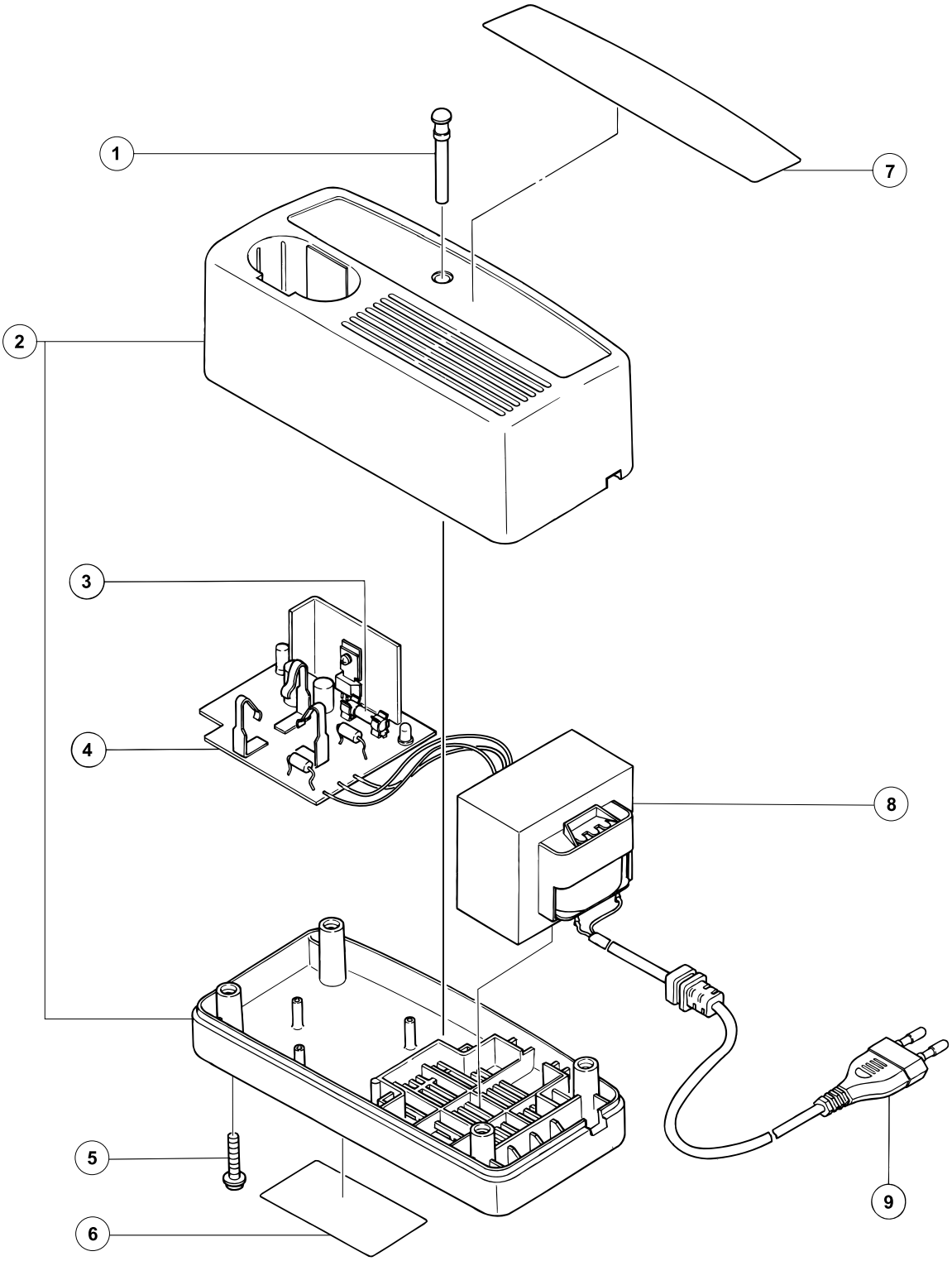

PARTS

	ITEM NO.	CODE NO.	DESCRIPTION	NO. USED	REMARKS	
	1	318-258	LIGHT BAR	1		
	2	318-267	CASE (A).(B) SET	1		
	3	320-682	FUSE (6.3A/250V)	1		
	4	318-256	PRINTED CIRCUIT BOARD ASS'Y	1	INCLUD. 3	
	5	994-806	SCREW (PLASTIC TIE) D4X20	4		
	6		NAME PLATE	1		
	7		HITACHI LABEL	1		
*	8	321-911	TRANSFORMER 220V	1		
*	8	321-912	TRANSFORMER 230V	1		
*	9	318-262	CORD	1		
*	9	318-261	CORD	1	FOR GBR, HKG	
*	9	319-327	CORD	1	FOR CHN	

* ALTERNATIVE PARTS

Printed in Japan 2 -- 03
(030225N)