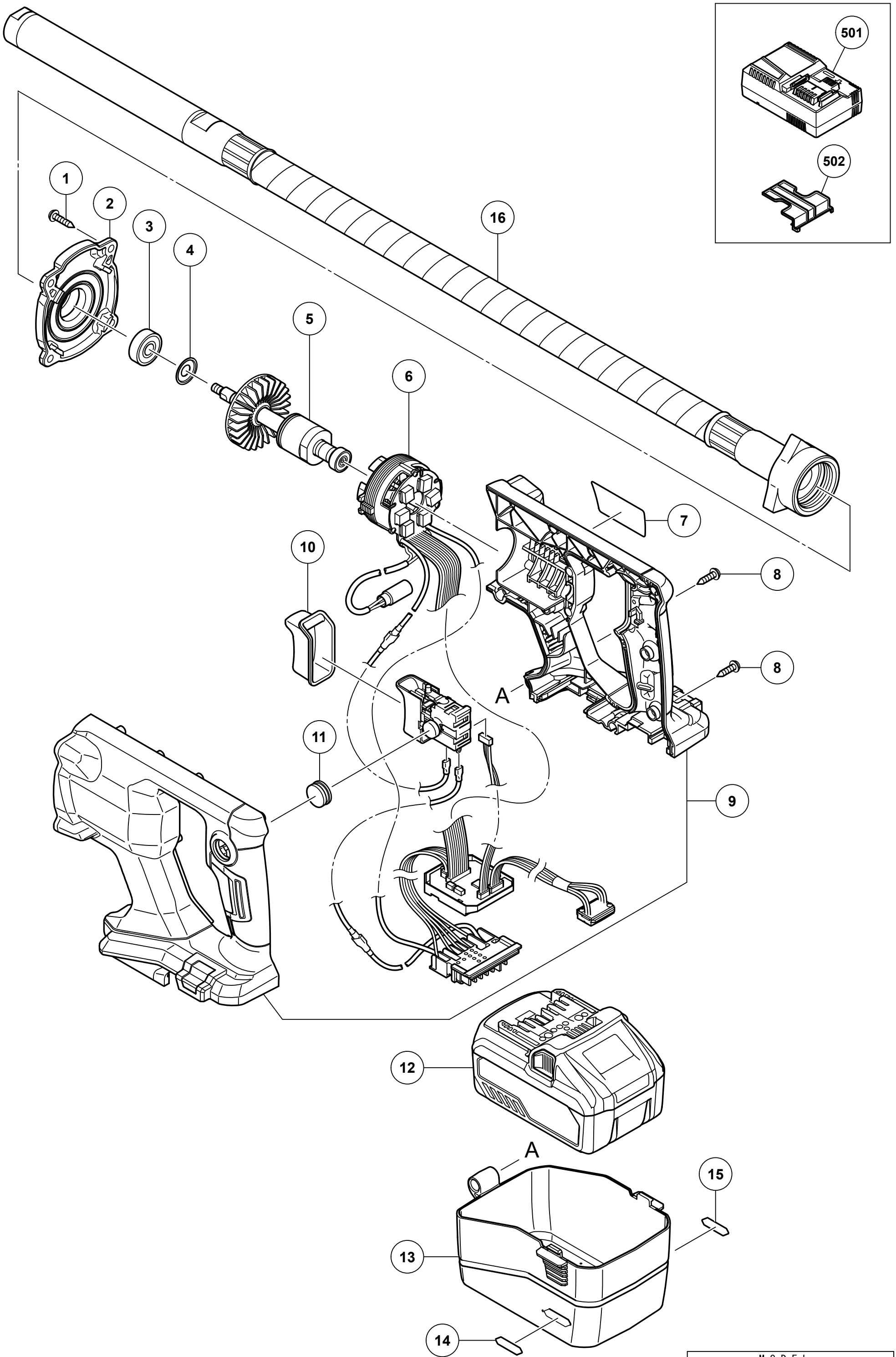

MODEL
UV3628DA

Rev.2
10.7.2020

HiKOKI

CORDLESS OTHERS UV3628DA

Item No.	Code No.	Description	No. Used	Remarks
1	302089	TAPPING SCREW (W/FLANGE) D5X20 (BLACK)	4	
2	376121	FRONT COVER	1	
3	629VVM	BALL BEARING 629VV	1	
4	958915	WASHER (A)	1	
5	361129	ROTOR ASS'Y	1	
6	341067	STATOR FET PCB ASS'Y	1	
7		NAME PLATE	1	
8	313687	TAPPING SCREW (W/FLANGE) D3X16 (BLACK)	12	
9	376120	HOUSING (A).(B) SET	1	
10	376123	SWITCH COVER	1	
11	376124	ON LOCK COVER	1	
12	372120	BATTERY BSL 36B18 (EUROPE,AUS,NZL)	1	INCLUD.502
13	376122	BATTERY COVER	1	
14	373913	MV LABEL (A)	1	
15	373914	MV LABEL (B)	1	
16	376600	FLEXIBLE SHAFT	1	
		STANDARD ACCESSORIES		
501		CHARGER (MODEL UC 18YSL3)	1	
502	329897	BATTERY COVER	1	

* ALTERNATIVE PARTS