Assembly Diagram for WR 8DH

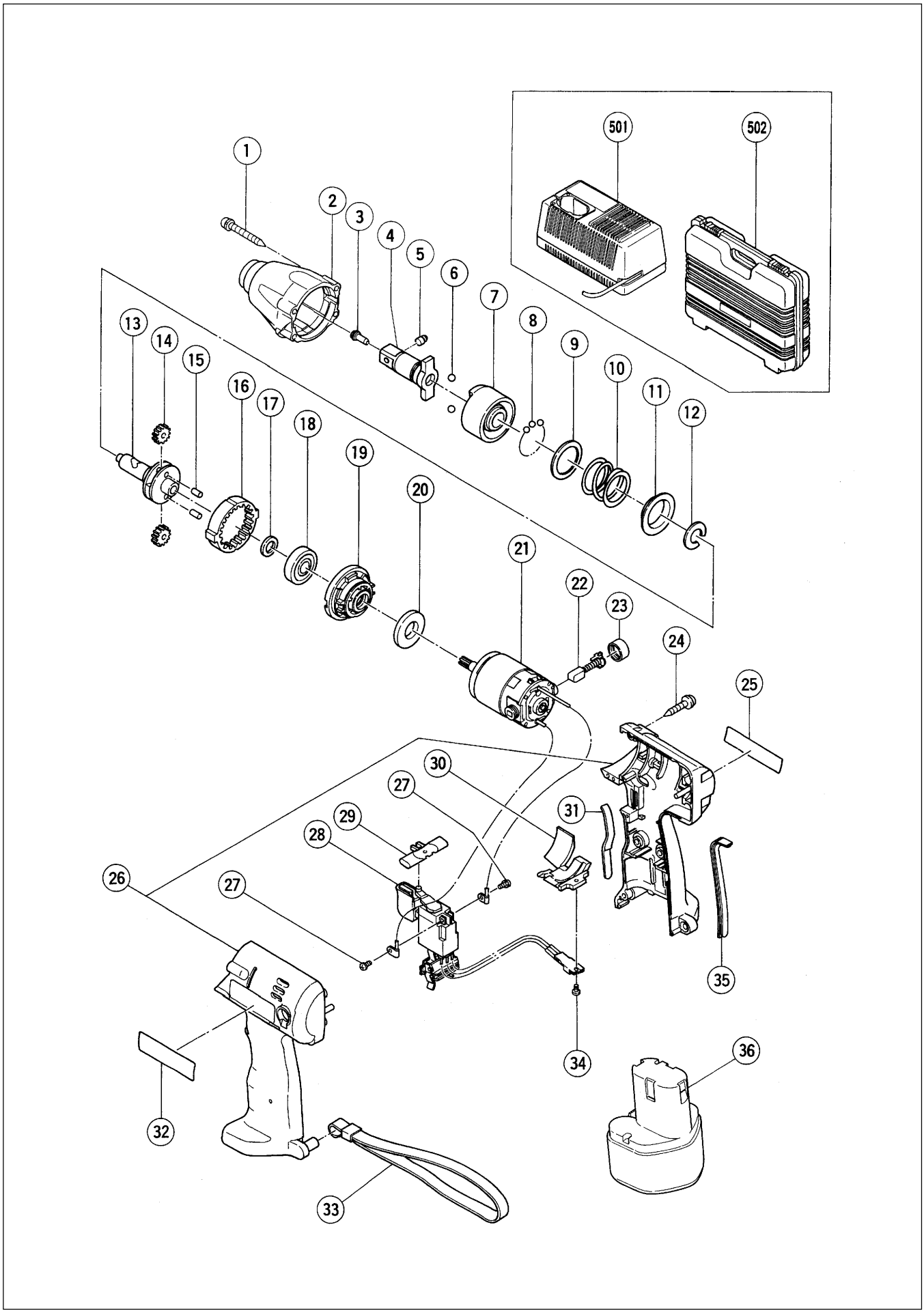

	ITEM NO.	CODE NO.	DESCRIPTION	NO. USED	REMARKS	
	1	307-851	TAPPING SCREW (W/SP. WASHER) D4X30(BLACK)	4		
	2	317-343	HAMMER CASE	1		
*	3	985-209	PIN RETAINER	1		
*	4	317-342	ANVIL (K) ASS'Y	1	INCLUD.3,5	
*	4	316-181	ANVIL (J)	1	FOR TPE,SIN	
*	5	985-208	PLUNGER	1		
	6	959-154	STEEL BALL D5.556 (10 PCS.)	2		
	7	316-780	HAMMER	1		
	8	315-980	STEEL BALL D3.5	25		
	9	315-978	WASHER (J)	1		
	10	316-781	SPRING	1		
	11	316-172	WASHER (S)	1		
	12	316-171	STOPPER	1		
	13	316-169	SPINDLE	1		
	14	316-313	IDLE GEAR	2		
	15	991-449	NEEDLE ROLLER	2		
	16	302-337	RING GEAR	1		
	17	991-455	WASHER (C)	1		
	18	600-1VV	BALL BEARING 6001VVCMPS2L	1		
	19	316-167	INNER COVER	1		
	20	310-319	DAMPER	1		
	21	316-782	MOTOR	1		
	22	999-054	CARBON BRUSH 5X6X11.5 (1 PAIR)	2		
	23	316-180	BRUSH CAP	2		
	24	302-086	TAPPING SCREW (W/FLANGE) D4X20 (BLACK)	7		
	25		NAME PLATE	1		
	26	317-879	HOUSING (A).(B) SET (GREEN)	1	INCLUD.31,35	
	27	994-532	MACHINE SCREW (W/SP. WASHER) M3X5	2		
	28	316-783	DC-SPEED CONTROL SWITCH	1		
	29	316-166	PUSHING BUTTON	1		
	30	316-179	FIN ASS'Y	1	INCLUD.34	
	31	316-178	GRIP (F)	1		
	32		HITACHI LABEL	1		
	33	306-952	STRAP	1		
	34	311-131	S-TIGHT SCREW D3.5X6	1		
	35	316-177	GRIP (R)	1		
*	36	310-377	BATTERY EB 9B (W/ENGLISH N.P.)	1		
*	36	310-450	BATTERY EB 9B (W/ENGLISH N.P.)	1	FOR TPE,NZL,AUS,SIN	
*	36	310-451	BATTERY EB 9B (W/ENGLISH N.P.)	1	FOR USA	
*	36	316-662	BATTERY EB 9H (W/ENGLISH N.P.)	1		

* : ALTERNATIVE PARTS

STANDARD ACCESSORIES

ITEM NO.	CODE NO.	DESCRIPTION	NO. USED	REMARKS	
501		CHARGER (MODEL UC 14YF2)	1	DEPENDING ON ORDER SPEC.	
502	306-306	CASE	1		

OPTIONAL ACCESSORIES

	ITEM NO.	CODE NO.	DESCRIPTION	NO. USED	REMARKS	
*	601	316-662	BATTERY EB 9H (W/ENGLISH N.P.)	1	EXCEPT TPE,NZL,AUS,SIN,USA	
	602		CORNER ATTACHMENT (MODEL EW-14R)	1	INCLUD.603-618	
	603	955-300	HOUSING	1		
	604	955-301	METAL	3		
	605	955-302	SPINDLE	1		
	606	955-303	BEARING RACE	2		
	607	955-304	NEEDLE THRUST BEARING (NTA-1413)	2		
	608	955-305	COVER	1		
	609	955-306	NEEDLE BEARING (NTN BK1012)	1		
	610	948-227	RETAINING RING FOR D47 HOLE	1		
	611	955-307	PINION	1		
	612	955-308	SLEEVE	1		
	613	955-309	WASHER	1		
	614	955-310	SOCKET COVER	1		
	615	955-311	SOCKET	1		
	616	303-247	SEAL LOCK HEX. SOCKET HD. BOLT M5X25	6		
	617	873-537	SOCKET PIN	1		
	618	873-187	O-RING (J1SW1516)	1		
	619	991-481	FORM TIE SOCKET ASS'Y 11.3MMX95L	1	INCLUD.617,618	
	620	944-291	HEX. SOCKET ASS'Y 10MMX40L	1	INCLUD.617,618	
	621	873-632	HEX. SOCKET ASS'Y 12MMX40L	1	INCLUD.617,618	
	622	873-539	HEX. SOCKET ASS'Y 13MMX40L	1	INCLUD.617,618	
	623	873-540	HEX. SOCKET ASS'Y 14MMX40L	1	INCLUD.617,618	
	624	873-536	HEX. SOCKET ASS'Y 17MMX32L	1	INCLUD.617,618	
	625	873-624	HEX. SOCKET ASS'Y 19MMX34L	1	INCLUD.617,618	
	626	873-626	HEX. SOCKET ASS'Y 21MMX36L	1	INCLUD.617,618	
	627	873-627	HEX. SOCKET ASS'Y 22MMX40L	1	INCLUD.617,618	

* : ALTERNATIVE PARTS

ITEM NO.	CODE NO.	DESCRIPTION	NO. USED	REMARKS	
628	986-058	HEX. SOCKET FOR PLASTIC CONE 12MMX70L	1	INCLUD.617,618	
629	955-138	HEX. SOCKET ASS'Y (LONG) 12MMX52L	1	INCLUD.617,618	
630	955-139	HEX. SOCKET ASS'Y (LONG) 13MMX52L	1	INCLUD.617,618	
631	955-140	HEX. SOCKET ASS'Y (LONG) 14MMX52L	1	INCLUD.617,618	
632	955-141	HEX. SOCKET ASS'Y (LONG) 17MMX52L	1	INCLUD.617,618	
633	955-149	HEX. SOCKET ASS'Y (LONG) 17MMX75L	1	INCLUD.617,618	
634	955-142	HEX. SOCKET ASS'Y (LONG) 19MMX52L	1	INCLUD.617,618	
635	955-150	HEX. SOCKET ASS'Y (LONG) 19MMX75L	1	INCLUD.617,618	
636	955-143	HEX. SOCKET ASS'Y (LONG) 21MMX52L	1	INCLUD.617,618	
637	955-151	HEX. SOCKET ASS'Y (LONG) 21MMX75L	1	INCLUD.617,618	
638	991-480	HEX. SOCKET ASS'Y (LONG) 21MMX125L	1	INCLUD.617,618	
639	955-144	HEX. SOCKET ASS'Y (LONG) 22MMX52L	1	INCLUD.617,618	
640	873-633	EXTENSION BAR ASS'Y (SQUARE) 12.7MMX100L	1	INCLUD.617,618	
641	992-610	UNIVERSAL JOINT ASS'Y	1	INCLUD.617,618,642	
642	955-153	UNIVERSAL JOINT PIN	1		
643	993-658	SOCKET ASS'Y FOR DUCT 12MMX95L	1	INCLUD.617,618,644	
644	993-659	SOCKET FOR DUCT 12MMX52L	1		
645	992-613	SOCKET ASS'Y FOR DUCT 13MMX95L	1	INCLUD.617,618,646	
646	992-614	SOCKET FOR DUCT 13MMX52L	1		
647	992-615	SOCKET ASS'Y FOR DUCT 14MMX95L	1	INCLUD.617,618,648	
648	992-616	SOCKET FOR DUCT 14MMX52L	1		
649	991-476	BIT ADAPTER ASS'Y	1	INCLUD.617,618	
650	307-824	HOLSTER	1		
651	308-090	HOOK (FOR CORDLESS TOOLS)	1		
652	309-922	GREASE FOR IMPACT DRIVER (500G)	1		

* : ALTERNATIVE PARTS